TITLE: HARDSCAPE PLAN AND LIGHTING PLAN

DWG NO TCE.10477A-LP-1018-LP-10402

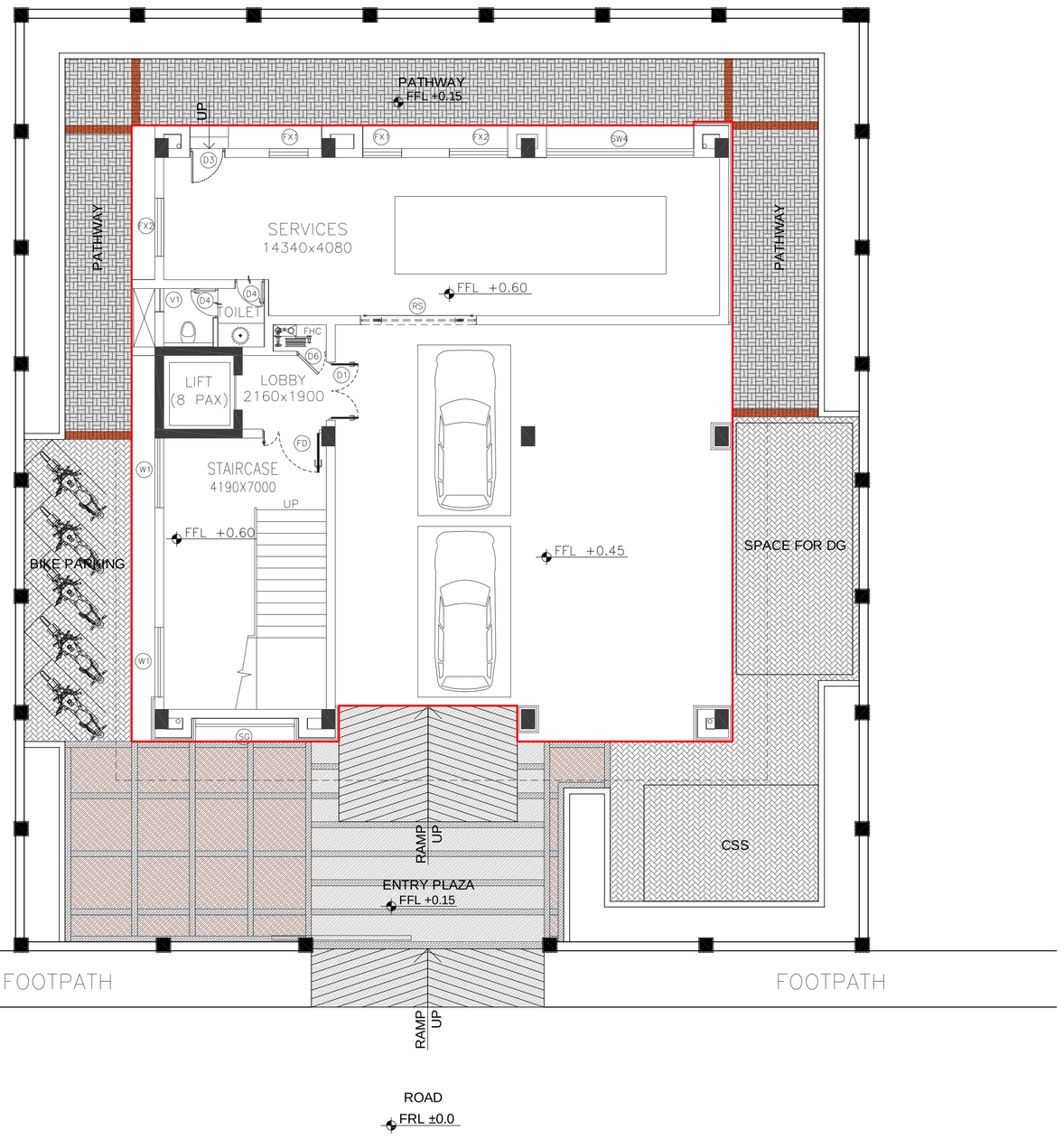

P3 HARDSCAPE PLAN
SCALE - 1:100

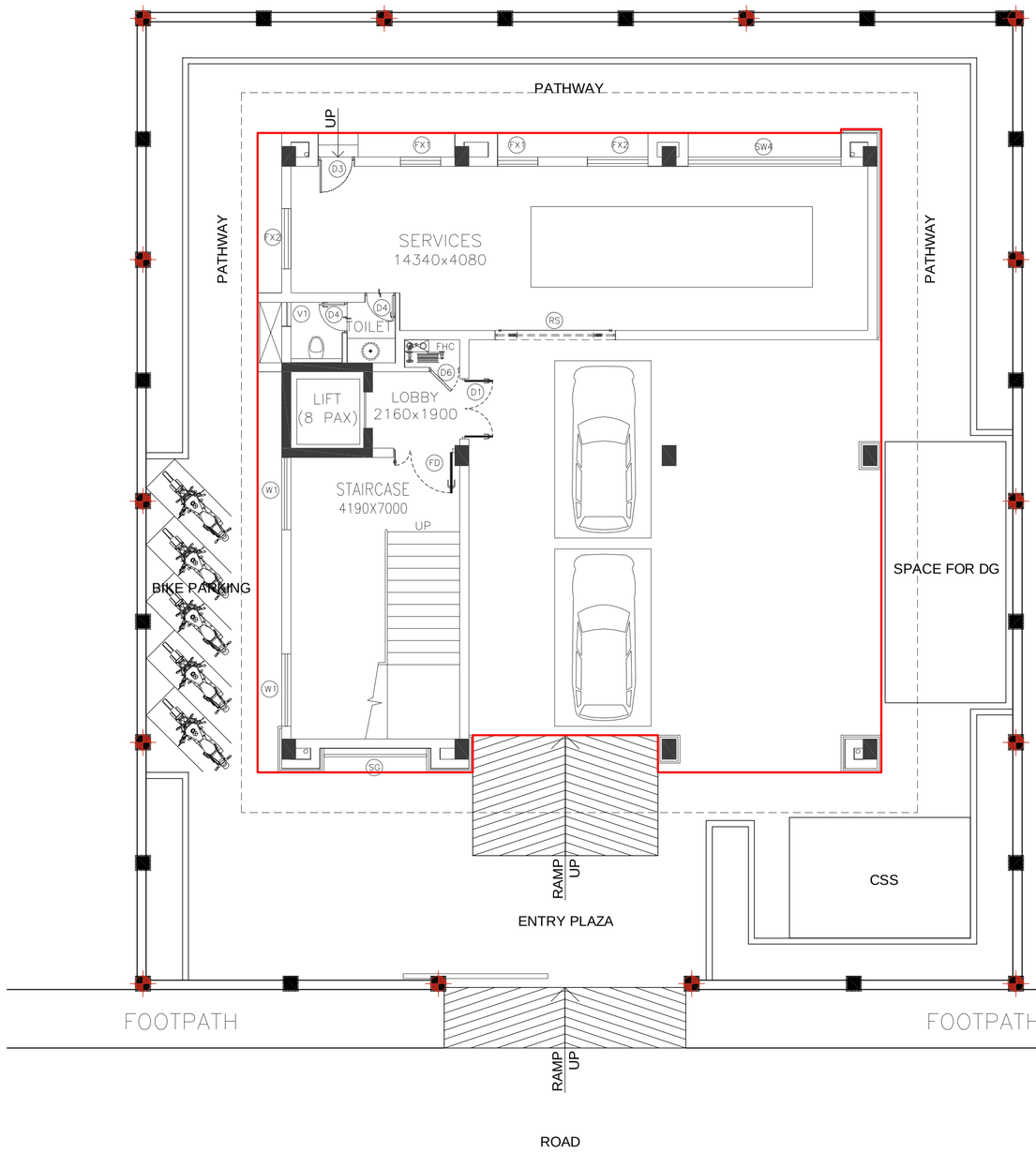

P4 LIGHTING PLAN
SCALE - 1:100

HARDSCAPE LEGEND

SR.	SYMBOL	DESCRIPTION	QUANTITY
1.		Interlocking 60mm thick Concrete pavers (Dark Gray)	75 sqm
2.		Interlocking 60mm thick Concrete pavers Brick pavers (Light Gray)	70 sqm
3.		Interlocking 60mm thick Concrete pavers Brick pavers (Red)	10 sqm
4.		Polished Black Granite (150 mm wide band)	20 sqm
5.		Flamed Granite (18mm thick)	50 sqm
6.		Polished Tan Brown Granite (25mm thick)	30 sqm

LIGHTING LEGEND

SR.	SYMBOL	DESCRIPTION	QUANTITY
1.		GATE LIGHT	14 Nos.

	SIGN.												
	INITIALS												
	REVISIONS												
	SIGN.												
	INITIALS												
	REVISIONS												
	SIGN.												
	INITIALS												
ISSUE		DRN	DSN	CHD	CV	EL	IC	ME	PL	HVAC	EXT	LS	PE/PM	APPD	DATE
					CLEARED										

GOOD FOR CONSTRUCTION

DO NOT SCALE

'P' (PRELIMINARY) ISSUES ARE NOT TO BE USED FOR CONSTRUCTION / FABRICATION BUT ARE ISSUED FOR LIMITED PURPOSES ONLY AS INDICATED IN THE SMALL BLOCK ABOVE THIS BLOCK.

CONSTRUCTION / FABRICATION WORK IS PERMITTED ON 'R' (RELEASED) ISSUES ONLY.

INFORMATION CONTAINED WITHIN 'HOLD' IS NOT RELEASED FOR CONSTUCTION / FABRICATION. FIELD MUST GET DESIGN OFFICE TO CLEAR 'HOLDS' IN TIME BEFORE PROCEEDING WITH ANY CONSTRUCTION / FABRICATION WORK RELATED TO 'HOLDS'.

Proprietary rights of the information contained herein belong to TCE. This information is intended to be used for the mentioned purpose/project only. In case of misuse of information and any claim arising thereof, cost and consequence will be on the party misusing the information.

FILE NAME : TCE.10477A-AC-1007-LP-10402-R0

GUWAHATI SMART CITY DEVELOPMENT AGENCY LTD.

SMART CITY MISSION GUWAHATI

HARDSCAPE PLAN AND LIGHTING PLAN

TATA CONSULTING ENGINEERS LIMITED

MUMBAI

SCALE : 1:100

DC & DISC: DEL-AC

DWG NO. TCE.10477A-LP-1018-LP-10402

ISSUE R0

SIZE-A1

FILE NAME: F-091-Rev-R0.dwg

TCE FORM NO. 091 R0

TITLE: LANDSCAPE PLANTING PLAN – TREES, SHRUBS AND GROUNDCOVER
DWG NO TCE.10477A-LP-1018-LP-10403

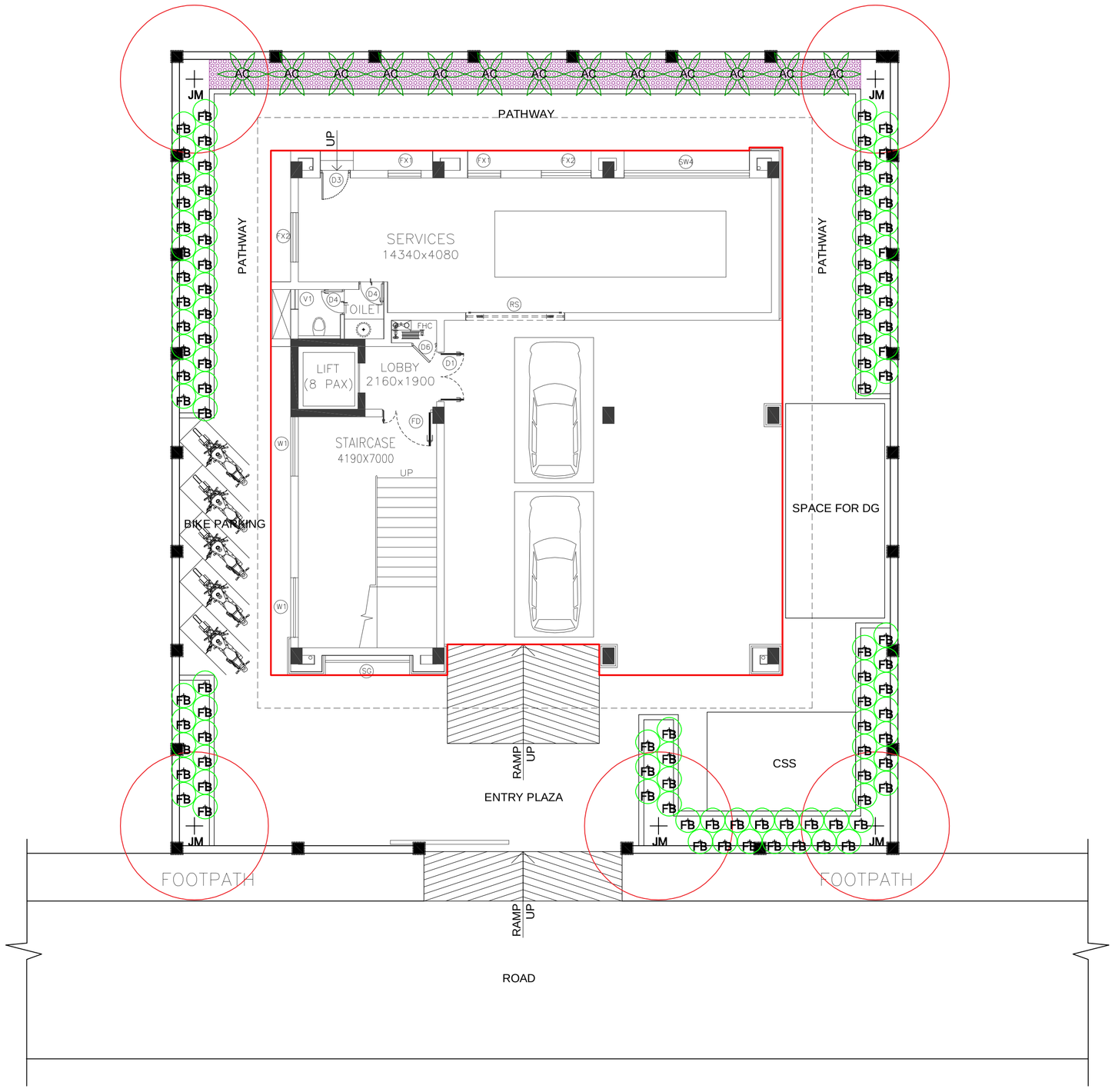

P5 LANDSCAPE PLANTING PLAN
SCALE - 1:100

SOFTSCAPE LEGEND

SR.	SYMBOL	DESCRIPTION	QUANTITY
1.	JM	Jacaranda mimosifolia	05 Nos.
2.	FB	Ficus benjamina	95 Nos.
3.	AC	Areca palm	13 Nos.
4.		Raphis excelsa	18 Sqm.

GOOD FOR CONSTRUCTION

DO NOT SCALE

'P' (PRELIMINARY) ISSUES ARE NOT TO BE USED FOR CONSTRUCTION / FABRICATION BUT ARE ISSUED FOR LIMITED PURPOSES ONLY AS INDICATED IN THE SMALL BLOCK ABOVE THIS BLOCK.

CONSTRUCTION / FABRICATION WORK IS PERMITTED ON 'R' (RELEASED) ISSUES ONLY.

INFORMATION CONTAINED WITHIN 'HOLD' IS NOT RELEASED FOR CONSTUCTION / FABRICATION. FIELD MUST GET DESIGN OFFICE TO CLEAR 'HOLDS' IN TIME BEFORE PROCEEDING WITH ANY CONSTRUCTION / FABRICATION WORK RELATED TO 'HOLDS'.

Proprietary rights of the information contained herein belong to TCE. This information is intended to be used for the mentioned purpose/project only. In case of misuse of information and any claim arising thereof, cost and consequence will be on the party misusing the information.

FILE NAME : TCE.10477A-AC-1007-LP-10403-R0

ISSUE		DRN	DSN	CHD	CV	EL	IC	ME	PL	HVAC	EXT	LS	PE/PM	APPD	DATE
	SIGN.														
	INITIALS														
	REVISIONS														
	SIGN.														
	INITIALS														
	REVISIONS														
	SIGN.														
	INITIALS														

CLEARED

GUWAHATI SMART CITY DEVELOPMENT AGENCY LTD.

SMART CITY MISSION GUWAHATI

LANDSCAPE PLANTING PLAN – TREES, SHRUBS AND GROUNDCOVER

TATA CONSULTING ENGINEERS LIMITED

MUMBAI

SCALE : 1:100
DC & DISC: DEL-AC
DWG NO. TCE.10477A-LP-1018-LP-10403
ISSUE R0
SIZE-A1

FILE NAME: F-091-Rev-R0.dwg

TCE FORM NO. 091 R0

CIVIL DRAWINGS

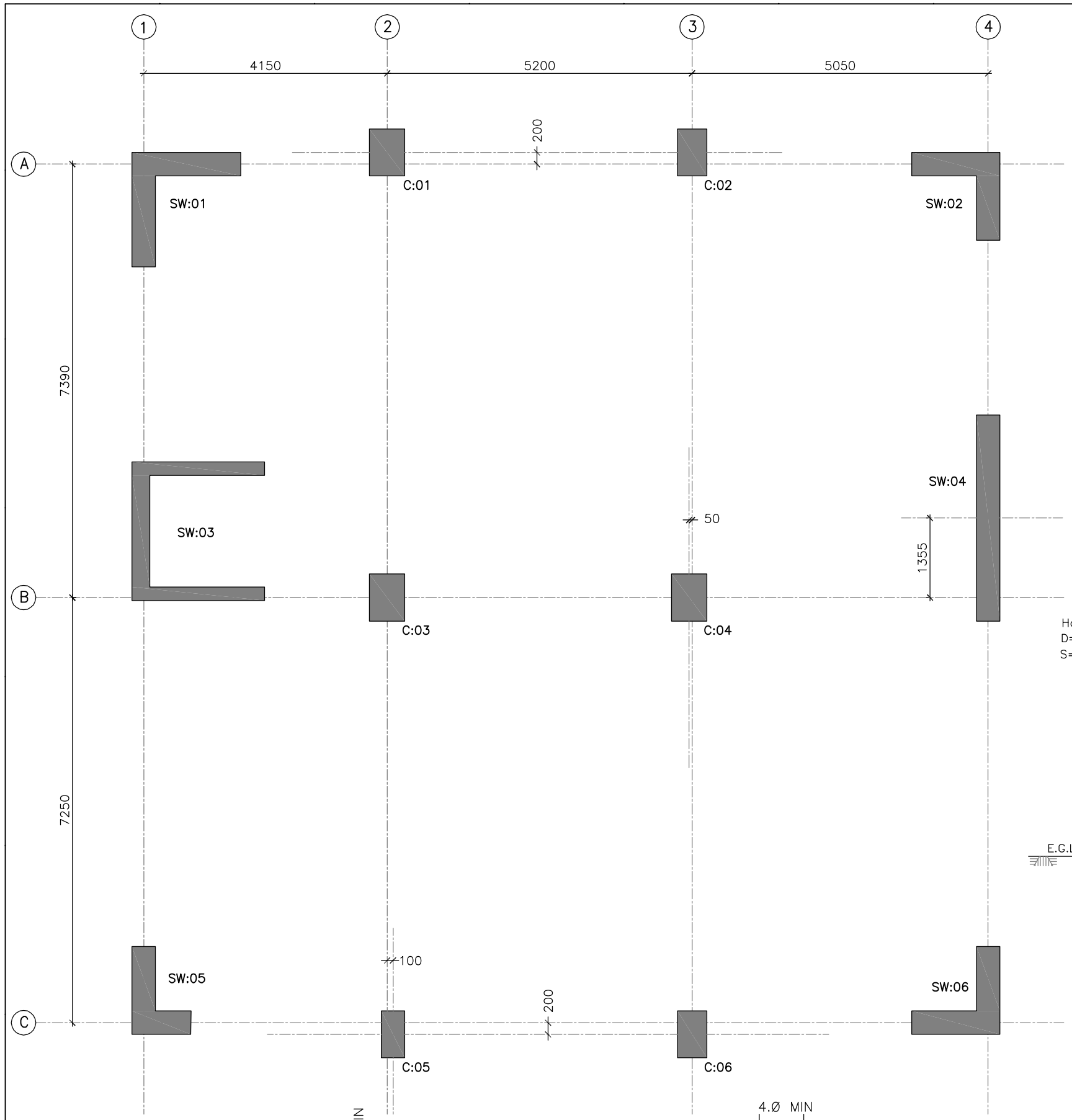

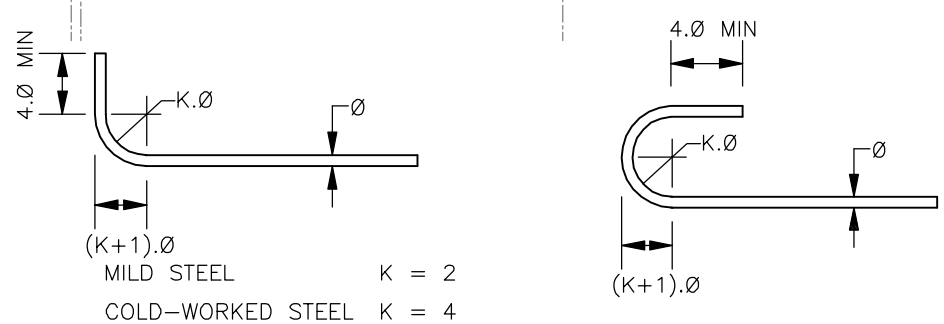

MILD STEEL K = 2

COLD–WORKED STEEL K = 4

STANDARD 90° BEND

STANDARD HOOK

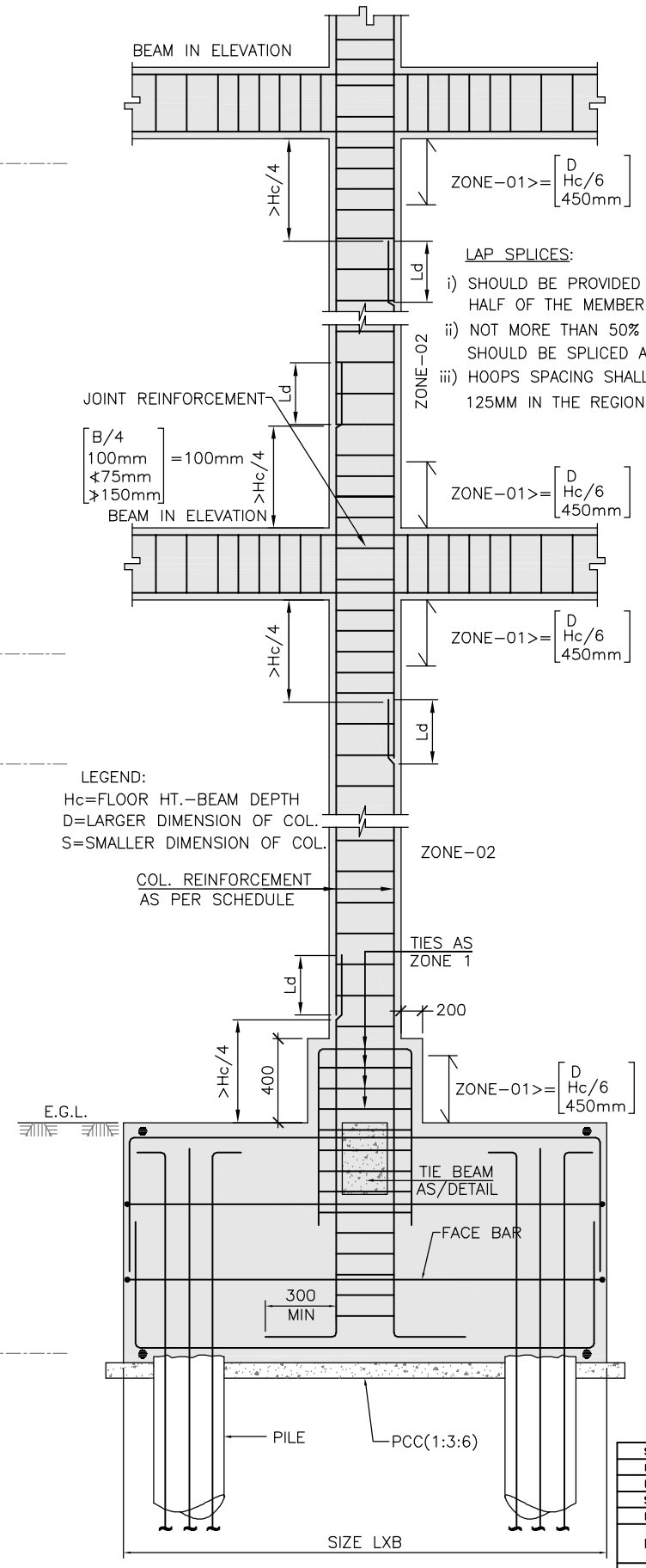

TYP. REINFORCEMENT DETAIL OF COLUMN

LAP SPLICES:

i) SHOULD BE PROVIDED IN THE CENTRAL HALF OF THE MEMBER LENGTH.

ii) NOT MORE THAN 50% OF THE BARS SHOULD BE SPLICED AT ONE SECTION.

iii) HOOPS SPACING SHALL NOT EXCEED 125MM IN THE REGION OF SPLICES.

RELATED DRAWINGS:

1. TCE.10477A–CV–1007–RC–1002
2. TCE.10477A–CV–1007–RC–1003
3. TCE.10477A–CV–1007–RC–1004
4. TCE.10477A–CV–1007–RC–1005
5. TCE.10477A–CV–1007–RC–1006
6. TCE.10477A–CV–1007–RC–1007
7. TCE.10477A–CV–1007–RC–1008
8. TCE.10477A–CV–1007–RC–1009

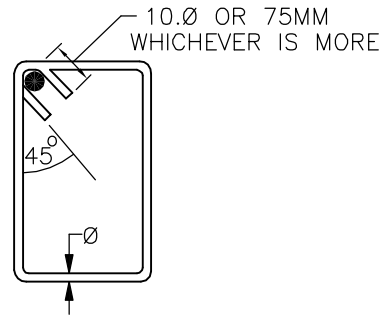

TYP. DETAIL OF TIES

NOTES:

1. ALL DIMENSIONS AND LEVELS ARE IN mm U.N.O.
2. ONLY FIGURED DIMENSIONS ARE TO BE FOLLOWED, NOT TO BE MEASURED.
3. GRADE OF CONCRETE SHALL BE OF M25(1:1:2) U.N.O.
4. GRADE OF REINFORCEMENT STEEL SHALL BE OF Fe500
5. THIS DRAWING SHALL BE READ IN CONJUNCTION WITH RELEVANT ARCHITECTURAL DRAWING
6. LAP & ANCHORAGE SHALL BE 50 TIMES BAR DIA.
7. NOT MORE THAN 50% OF THE BARS SHALL BE SPLICED AT ONE SECTION.
8. USE SPACER BAR TO AVOID CONGESTION, WHEREVER NECESSARY.

TENDER PURPOSE ONLY

SIGN.														
INITIALS														
REVISIONS														
SIGN.														15.04.2020
INITIALS														
ISSUE	DRN	DSN	CHD	CV	EL	IC	ME	PL	HVAC	EXT	LS	PE/PM	APPD	DATE
				CLEARED										

GUWAHATI SMART CITY DEVELOPMENT AGENCY LTD.

SMART CITY MISSION GUWAHATI

DETAILS OF COLUMN

COLUMN LAYOUT (SHEET 1 / 9)

TATA CONSULTING ENGINEERS LIMITED

MUMBAI

SCALE : N.T.S.	DWG NO. TCE.10477A–CV–1007–RC–1001	ISSUE R0
DC & DISC: –––		

COLUMN SCHEDULE

LEVEL	COLM. MKD. / DESCRIPTION	SW:01	C:01	C:02	SW:02	SW:03	C:03	C:04	SW:04	SW:05	C:05	C:06	SW:06
UPTO MUMTY	COLUMN SIZE CONCRETE GRADE LONGITUDINAL BARS A B C D REFER SECTION	↑	↑	X	X	↑	↑	X	X	↑	500X800 M25 A=4-20Φ B=8-16Φ C=6-16Φ D=2-16Φ SEC.-09	X	X
FOURTH FLOOR	COLUMN SIZE CONCRETE GRADE LONGITUDINAL BARS A B C D REFER SECTION	↑	600X800 M25 A=4-20Φ B=8-20Φ C=8-16Φ D=2-16Φ SEC.-03	X	↑	↑	600X800 M25 A=4-20Φ B=8-20Φ C=8-20Φ D=2-20Φ SEC.-06	X	↑	↑	↑	↑	↑
THIRD FLOOR	COLUMN SIZE CONCRETE GRADE LONGITUDINAL BARS A B C D REFER SECTION	↑	↑	↑	↑	↑	↑	↑	↑	↑	500X800 M25 A=4-25Φ B=8-25Φ C=6-20Φ D=2-20Φ SEC.-08	↑	↑
SECOND FLOOR	COLUMN SIZE CONCRETE GRADE LONGITUDINAL BARS A B C D REFER SECTION	AS/SECTION M25 A=36-25Φ B=30-20Φ ---- ---- SWC-02	600X800 M25 A=4-25Φ B=8-20Φ C=8-20Φ D=2-20Φ SEC.-02	↑	AS/SECTION M25 A=36-20Φ B=20-16Φ ---- ---- SWC-04	↑	600X800 M25 A=4-25Φ B=8-20Φ C=8-20Φ D=2-20Φ SEC.-02	600X800 M25 A=4-25Φ B=8-25Φ C=8-20Φ D=2-20Φ SEC.-05	400X3510 M25 A=36-25Φ B=32-20Φ ---- ---- SWC-06	AS/SECTION M25 A=36-20Φ B=12-16Φ ---- ---- SWC-08	↑	↑	AS/SECTION M25 A=36-20Φ B=20-16Φ ---- ---- SWC-10
FIRST FLOOR	COLUMN SIZE CONCRETE GRADE LONGITUDINAL BARS A B C D REFER SECTION	↑	↑	↑	↑	↑	↑	↑	↑	↑	↑	↑	↑
GROUND FLOOR	COLUMN SIZE CONCRETE GRADE LONGITUDINAL BARS A B C D REFER SECTION	↑	↑	↑	↑	↑	↑	↑	↑	↑	↑	↑	↑
TOP OF PILE CAP	COLUMN SIZE CONCRETE GRADE LONGITUDINAL BARS A B C D REFER SECTION	AS/SECTION M25 A=36-25Φ B=30-25Φ ---- ---- SWC-01	600X800 M25 A=4-25Φ B=8-25Φ C=4-25Φ D=6-20Φ SEC.-01	500X800 M25 A=4-25Φ B=8-25Φ C=6-25Φ D=2-20Φ SEC.-04	AS/SECTION M25 A=36-25Φ B=20-25Φ ---- ---- SWC-03	AS/SECTION M25 A=30-25Φ B=22-25Φ C=40-20Φ ---- SWC-11	600X800 M25 A=4-25Φ B=8-25Φ C=8-20Φ D=2-20Φ SEC.-05	600X800 M25 A=4-25Φ B=8-25Φ C=4-25Φ D=6-20Φ SEC.-01	400X3510 M25 A=36-25Φ B=32-25Φ ---- ---- SWC-05	AS/SECTION M25 A=36-25Φ B=12-25Φ ---- ---- SWC-07	500X800 M25 A=4-25Φ B=8-25Φ C=6-25Φ D=2-25Φ SEC.-07	500X800 M25 A=4-25Φ B=8-25Φ C=6-20Φ D=2-20Φ SEC.-08	AS/SECTION M25 A=36-25Φ B=20-25Φ ---- ---- SWC-09

RELATED DRAWINGS:

1. TCE.10477A-CV-1007-RC-1001
2. TCE.10477A-CV-1007-RC-1003
3. TCE.10477A-CV-1007-RC-1004
4. TCE.10477A-CV-1007-RC-1005
5. TCE.10477A-CV-1007-RC-1006
6. TCE.10477A-CV-1007-RC-1007
7. TCE.10477A-CV-1007-RC-1008
8. TCE.10477A-CV-1007-RC-1009

NOTES:

1. ALL DIMENSIONS AND LEVELS ARE IN mm U.N.O.
2. ONLY FIGURED DIMENSIONS ARE TO BE FOLLOWED, NOT TO BE MEASURED.
3. GRADE OF CONCRETE SHALL BE OF M25(1:1:2) U.N.O.
4. GRADE OF REINFORCEMENT STEEL SHALL BE OF Fe500
5. THESE DRAWINGS ARE THE PROPERTY OF M/S TATA CONSULTING ENGINEERS LIMITED. THOSE SHALL NOT BE COPIED, TRANSFERRED, MODIFIED OR USED FOR ANY PURPOSE OTHER THAN FOR THE PLANNING AND CONSTRUCTION OF "INTEGRATED COMMAND CONTROL CENTRE PROJECT AT PANJABARI, GUWAHATI"
6. DE-SHUTTERING PERIOD SHALL NOT BE LESS THAN SPECIFIED BELOW:-
   - a) VERTICAL FACES OF COLUMN, BEAM & WALL : 24 HOURS
   - b) SLAB (i) SPANNING UPTO 4.5m : 7 DAYS
   - (ii) SPANNING OVER 4.5m : 14 DAYS
   - c) BEAM (i) SPANNING UPTO 6.0m : 14 DAYS
   - (ii) SPANNING OVER 6.0m : 21 DAYS
8. CLEAR COVER TO THE MAIN REINFORCEMENT
   - a) FOUNDATION : 60mm
   - b) COLUMN UPTO PLINTH : 60mm
   - c) COLUMN ABOVE PLINTH : 40mm
   - d) BEAM : 25mm
   - e) WALL : 30mm
   - f) SLAB : 15-20mm
9. LAP & ANCHORAGE SHALL BE OF 50 TIMES OF BAR DIA.
10. NOT MORE THAN 50% OF THE BARS SHALL BE SPLICED AT ONE SECTION
11. USE SPACE BAR TO AVOID CONGESTION, WHEREVER NECESSARY.
12. ANY DISCREPANCY NOTED SHOULD BE BROUGHT TO THE NOTICE OF THE CONSULTANT.
13. THIS DRAWING SHALL BE READ IN CONJUNCTION WITH RELEVANT ARCHITECTURAL DRAWINGS.

TENDER PURPOSE ONLY

SIGN.													
INITIALS													
REVISIONS													
SIGN.													15.04.2020
INITIALS													
ISSUE	DRN	DSN	CHD	CV	EL	IC	ME	PL	HVAC	EXT	LS	PE/PM	APPD	DATE
				CLEARED									

GUWAHATI SMART CITY DEVELOPMENT AGENCY LTD.
SMART CITY MISSION GUWAHATI

DETAILS OF COLUMN
COLUMN SCHEDULE (SHEET 2 / 9)

TATA CONSULTING ENGINEERS LIMITED
MUMBAI

SCALE : N.T.S.	DWG NO. TCE.10477A-CV-1007-RC-1002	ISSUE R0
DC & DISC : ---		

SECTION MARK	SECTIONAL DETAIL	TIES DETAIL

SWC–01

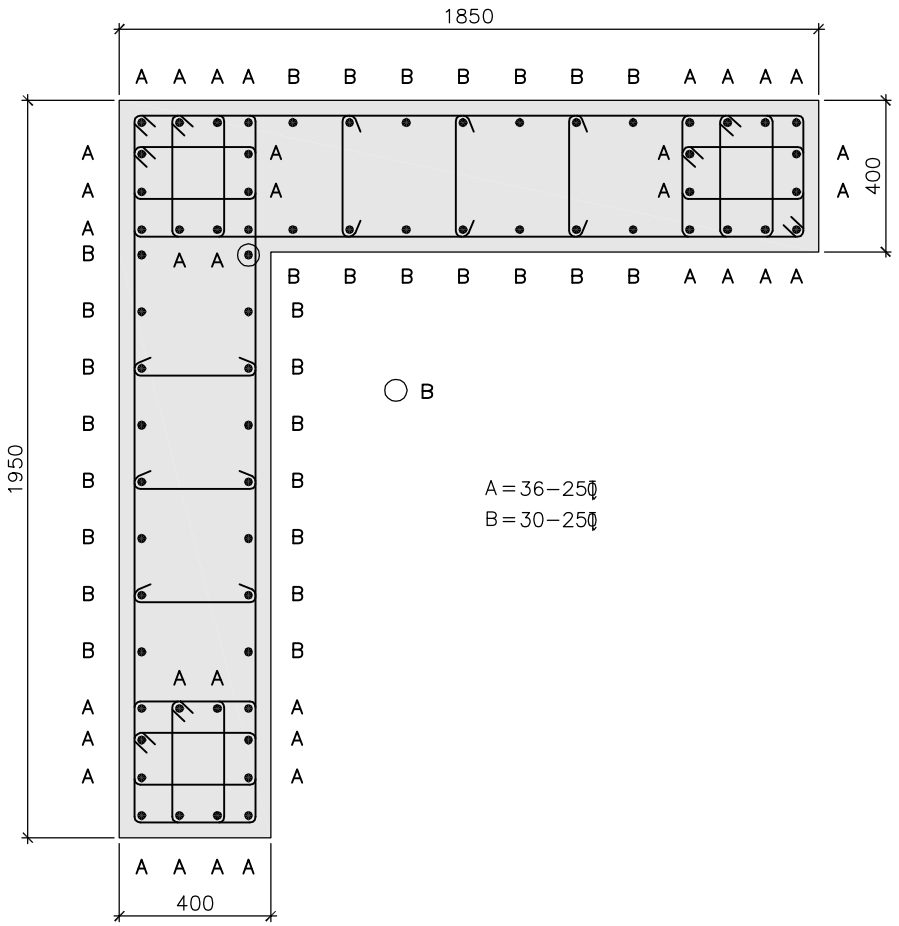

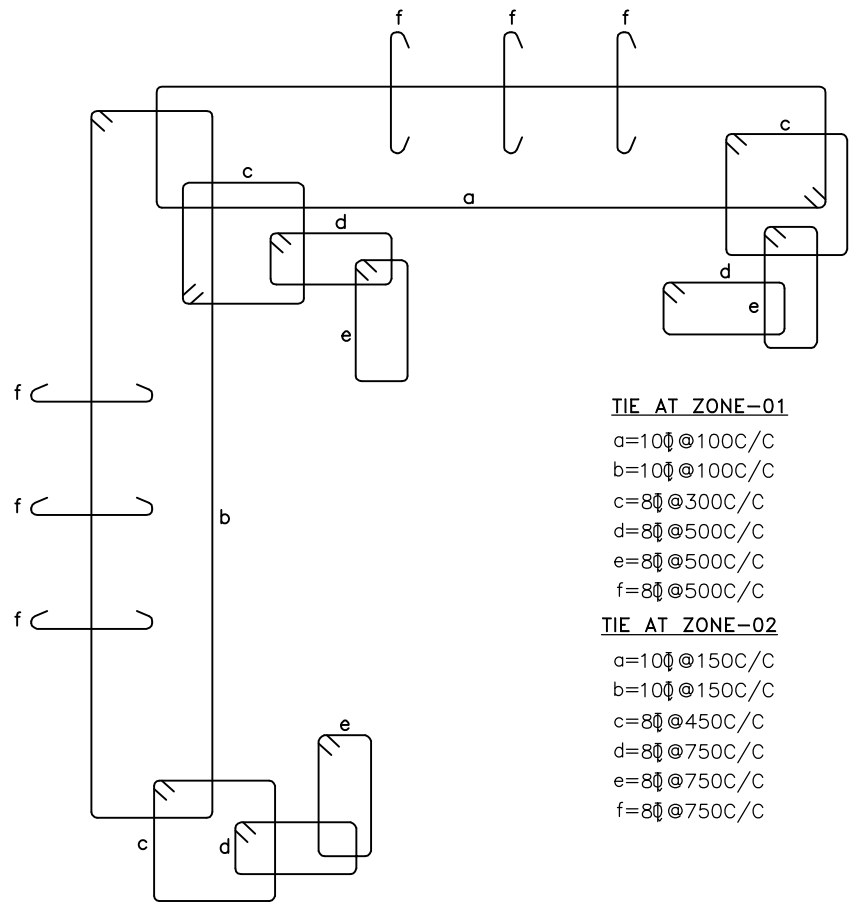

TIE AT ZONE–01

a=10ϕ@100C/C
b=10ϕ@100C/C
c=8ϕ@300C/C
d=8ϕ@500C/C
e=8ϕ@500C/C
f=8ϕ@500C/C

TIE AT ZONE–02

a=10ϕ@150C/C
b=10ϕ@150C/C
c=8ϕ@450C/C
d=8ϕ@750C/C
e=8ϕ@750C/C
f=8ϕ@750C/C

SWC–02

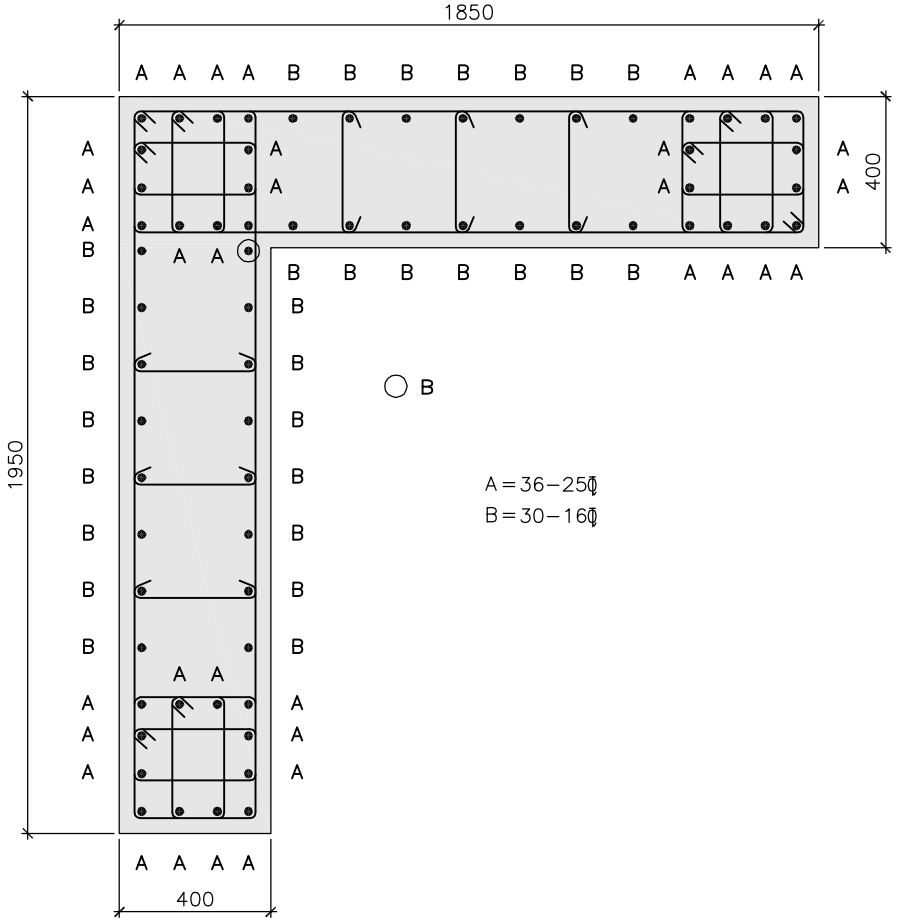

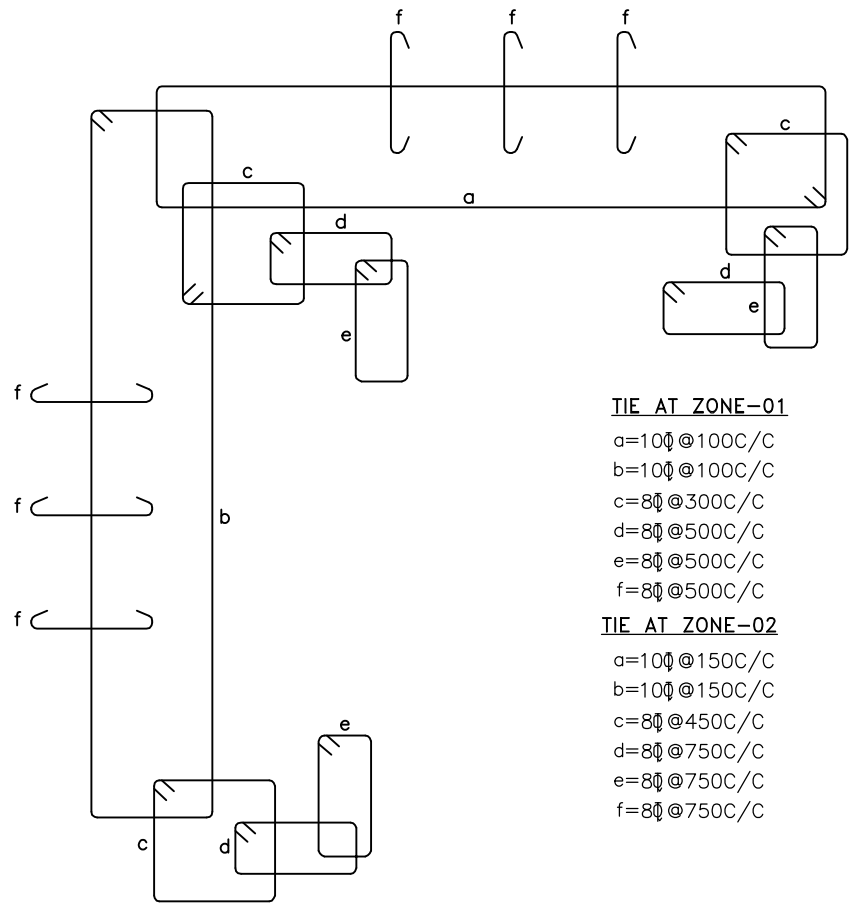

TIE AT ZONE–01

a=10ϕ@100C/C
b=10ϕ@100C/C
c=8ϕ@300C/C
d=8ϕ@500C/C
e=8ϕ@500C/C
f=8ϕ@500C/C

TIE AT ZONE–02

a=10ϕ@150C/C
b=10ϕ@150C/C
c=8ϕ@450C/C
d=8ϕ@750C/C
e=8ϕ@750C/C
f=8ϕ@750C/C

RELATED DRAWINGS:

1. TCE.10477A–CV–1007–RC–1001
2. TCE.10477A–CV–1007–RC–1002
3. TCE.10477A–CV–1007–RC–1004
4. TCE.10477A–CV–1007–RC–1005
5. TCE.10477A–CV–1007–RC–1006
6. TCE.10477A–CV–1007–RC–1007
7. TCE.10477A–CV–1007–RC–1008
8. TCE.10477A–CV–1007–RC–1009

NOTES:

1. ALL DIMENSIONS AND LEVELS ARE IN mm U.N.O.
2. ONLY FIGURED DIMENSIONS ARE TO BE FOLLOWED, NOT TO BE MEASURED.
3. GRADE OF CONCRETE SHALL BE OF M25(1:1:2) U.N.O.
4. GRADE OF REINFORCEMENT STEEL SHALL BE OF Fe500
5. THESE DRAWINGS ARE THE PROPERTY OF M/S TATA CONSULTING ENGINEERS LIMITED. THOSE SHALL NOT BE COPIED, TRANSFERRED, MODIFIED OR USED FOR ANY PURPOSE OTHER THAN FOR THE PLANNING AND CONSTRUCTION OF "INTEGRATED COMMAND CONTROL CENTRE PROJECT AT PANJABARI, GUWAHATI"
6. DE–SHUTTERING PERIOD SHALL NOT BE LESS THAN SPECIFIED BELOW: –
   - a) VERTICAL FACES OF COLUMN, BEAM & WALL : 24 HOURS
   - b) SLAB (i) SPANNING UPTO 4.5m : 7 DAYS
   - (ii) SPANNING OVER 4.5m : 14 DAYS
   - c) BEAM (i) SPANNING UPTO 6.0m : 14 DAYS
   - (ii) SPANNING OVER 6.0m : 21 DAYS
8. CLEAR COVER TO THE MAIN REINFORCEMENT
   - a) FOUNDATION : 60mm
   - b) COLUMN UPTO PLINTH : 60mm
   - c) COLUMN ABOVE PLINTH : 40mm
   - d) BEAM : 25mm
   - e) WALL : 30mm
   - f) SLAB : 15–20mm
9. LAP & ANCHORAGE SHALL BE OF 50 TIMES OF BAR DIA.
10. NOT MORE THAN 50% OF THE BARS SHALL BE SPLICED AT ONE SECTION
11. USE SPACE BAR TO AVOID CONGESTION, WHEREVER NECESSARY.
12. ANY DISCREPANCY NOTED SHOULD BE BROUGHT TO THE NOTICE OF THE CONSULTANT.
13. THIS DRAWING SHALL BE READ IN CONJUNCTION WITH RELEVANT ARCHITECTURAL DRAWINGS.

TENDER PURPOSE ONLY

SIGN.													
INITIALS													
REVISIONS													
SIGN.													15.04.2020
INITIALS													
ISSUE	DRN	DSN	CHD	CV	EL	IC	ME	PL	HVAC	EXT	LS	PE/PM	APPD	DATE
				CLEARED									

GUWAHATI SMART CITY DEVELOPMENT AGENCY LTD.
SMART CITY MISSION GUWAHATI

DETAILS OF COLUMN
SECTIONAL DETAIL (SHEET 3 / 9)

TATA CONSULTING ENGINEERS LIMITED
MUMBAI

SCALE : N.T.S.	DWG NO. TCE.10477A–CV–1007–RC–1003	ISSUE R0
DC & DISC : –––		

SECTION MARK	SECTIONAL DETAIL	TIES DETAIL
SWC–03	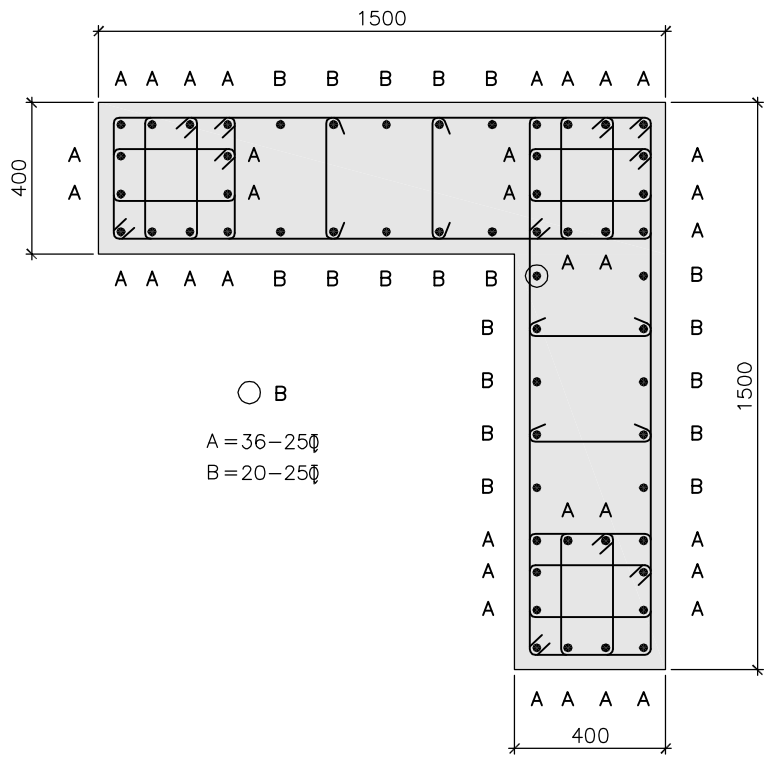 1500 400 1500 400 A A A A B B B B B A A A A A A B B B B B

SECTIONAL DETAIL

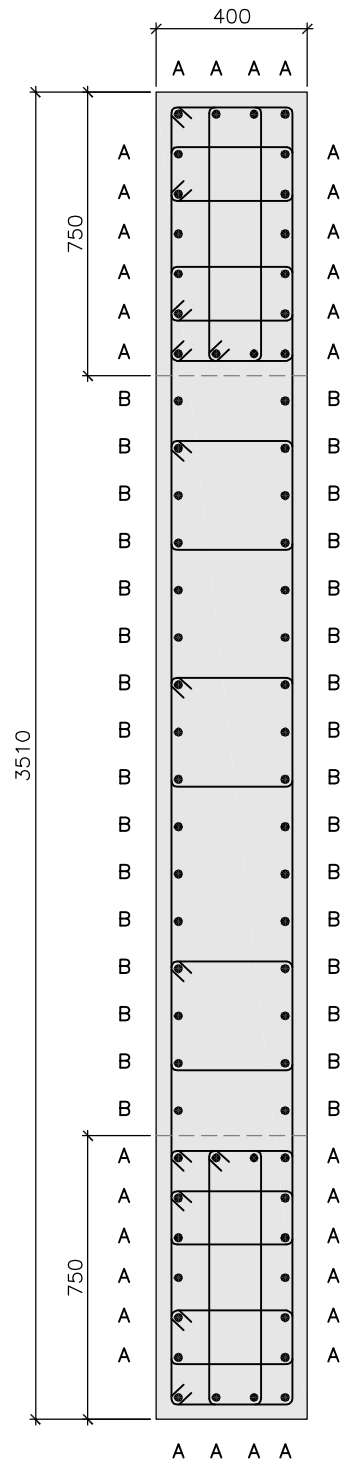

A=36−25ϕ
B=32−25ϕ

SWC−05

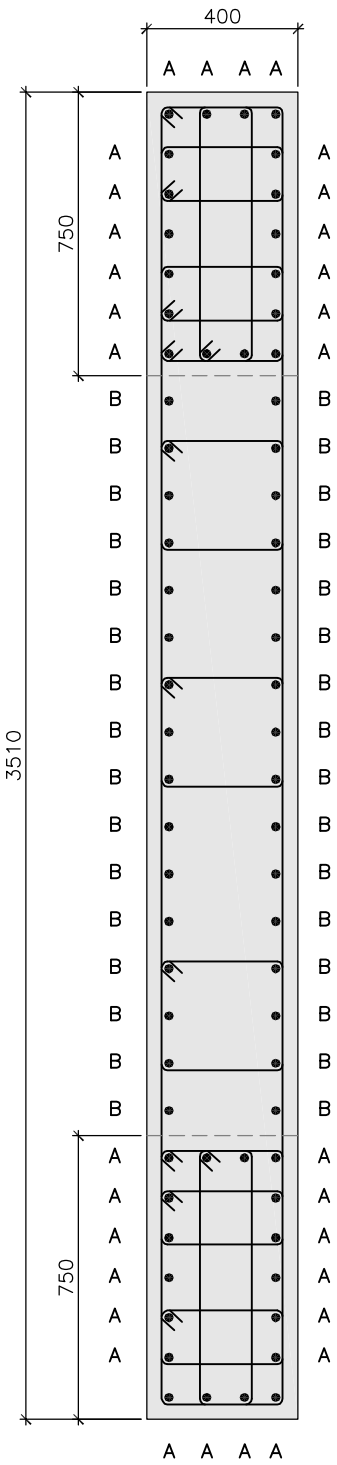

A=36−25ϕ
B=32−20ϕ

SWC−06

TIES DETAIL

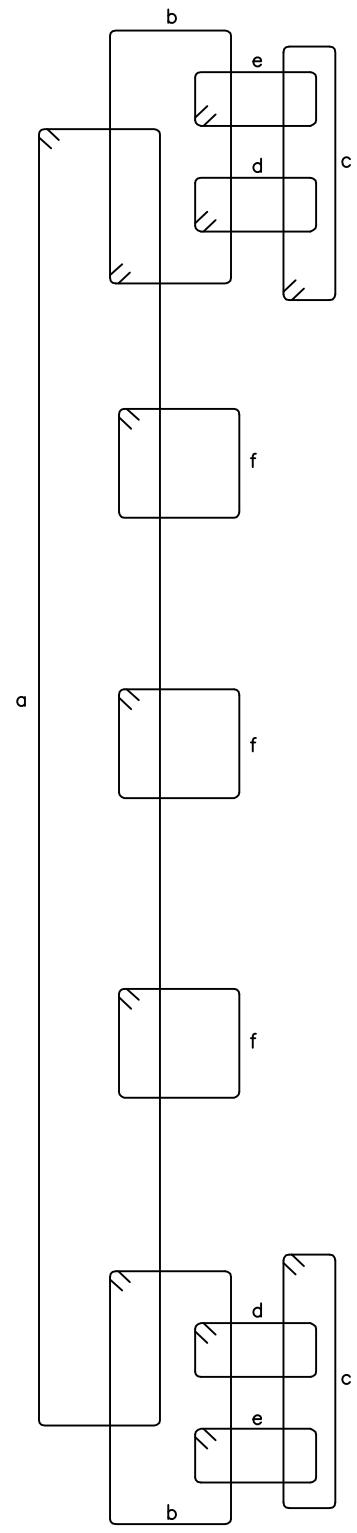

TIE AT ZONE−01

a=10ϕ@100C/C
b=8ϕ@300C/C
c=8ϕ@600C/C
d=8ϕ@500C/C
e=8ϕ@500C/C
f=8ϕ@500C/C

TIE AT ZONE−02

a=10ϕ@150C/C
b=8ϕ@450C/C
c=8ϕ@900C/C
d=8ϕ@750C/C
e=8ϕ@750C/C
f=8ϕ@750C/C

RELATED DRAWINGS:

1. TCE.10477A−CV−1007−RC−1001
2. TCE.10477A−CV−1007−RC−1002
3. TCE.10477A−CV−1007−RC−1003
4. TCE.10477A−CV−1007−RC−1004
5. TCE.10477A−CV−1007−RC−1006
6. TCE.10477A−CV−1007−RC−1007
7. TCE.10477A−CV−1007−RC−1008
8. TCE.10477A−CV−1007−RC−1009

NOTES:

1. ALL DIMENSIONS AND LEVELS ARE IN mm U.N.O.
2. ONLY FIGURED DIMENSIONS ARE TO BE FOLLOWED, NOT TO BE MEASURED.
3. GRADE OF CONCRETE SHALL BE OF M25(1:1:2) U.N.O.
4. GRADE OF REINFORCEMENT STEEL SHALL BE OF Fe500
5. THESE DRAWINGS ARE THE PROPERTY OF M/S TATA CONSULTING ENGINEERS LIMITED. THOSE SHALL NOT BE COPIED, TRANSFERRED, MODIFIED OR USED FOR ANY PURPOSE OTHER THAN FOR THE PLANNING AND CONSTRUCTION OF "INTEGRATED COMMAND CONTROL CENTRE PROJECT AT PANJABARI, GUWAHATI"
6. DE−SHUTTERING PERIOD SHALL NOT BE LESS THAN SPECIFIED BELOW: −
   a) VERTICAL FACES OF COLUMN, BEAM & WALL : 24 HOURS
   b) SLAB (i) SPANNING UPTO 4.5m : 7 DAYS
      (ii) SPANNING OVER 4.5m : 14 DAYS
   c) BEAM (i) SPANNING UPTO 6.0m : 14 DAYS
      (ii) SPANNING OVER 6.0m : 21 DAYS
8. CLEAR COVER TO THE MAIN REINFORCEMENT
   a) FOUNDATION : 60mm
   b) COLUMN UPTO PLINTH : 60mm
   c) COLUMN ABOVE PLINTH : 40mm
   d) BEAM : 25mm
   e) WALL : 30mm
   f) SLAB : 15−20mm
9. LAP & ANCHORAGE SHALL BE OF 50 TIMES OF BAR DIA.
10. NOT MORE THAN 50% OF THE BARS SHALL BE SPLICED AT ONE SECTION
11. USE SPACE BAR TO AVOID CONGESTION, WHEREVER NECESSARY.
12. ANY DISCREPANCY NOTED SHOULD BE BROUGHT TO THE NOTICE OF THE CONSULTANT.
13. THIS DRAWING SHALL BE READ IN CONJUNCTION WITH RELEVANT ARCHITECTURAL DRAWINGS.

TENDER PURPOSE ONLY

SIGN.													
INITIALS													
REVISIONS													
SIGN.													15.04.2020
INITIALS													
ISSUE	DRN	DSN	CHD	CV	EL	IC	ME	PL	HVAC	EXT	LS	PE/PM	APPD	DATE
				CLEARED									

GUWAHATI SMART CITY DEVELOPMENT AGENCY LTD.
SMART CITY MISSION GUWAHATI

DETAILS OF COLUMN
SECTIONAL DETAIL (SHEET 5 / 9)

TATA CONSULTING ENGINEERS LIMITED
MUMBAI

SCALE : N.T.S.	DWG NO. TCE.10477A−CV−1007−RC−1005	ISSUE R0
DC & DISC: −−−		

SECTION MARK	SECTIONAL DETAIL	TIES DETAIL
SWC–07	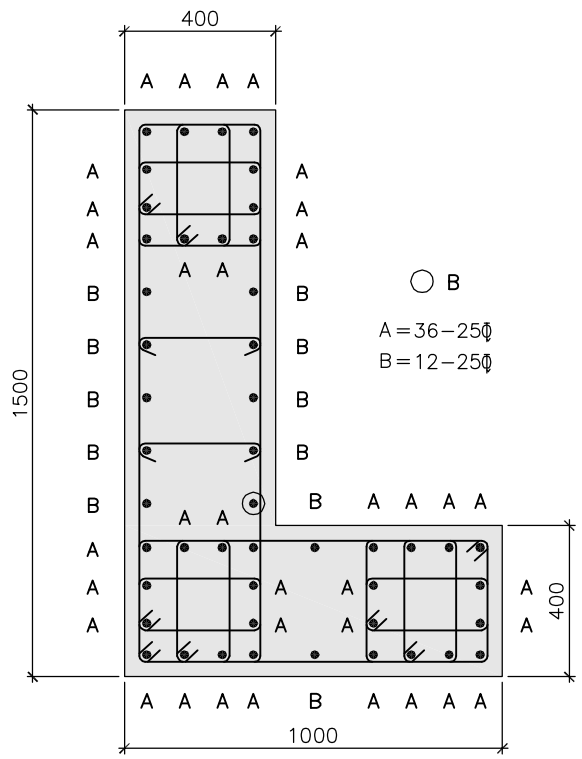	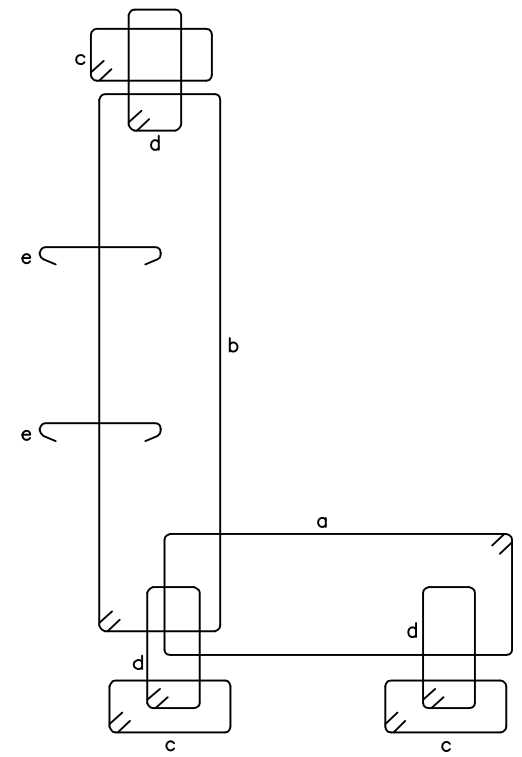 **TIE AT ZONE–01** a=10ϕ@100C/C b=10ϕ@100C/C c=8ϕ@300C/C d=8ϕ@500C/C e=8ϕ@500C/C **TIE AT ZONE–02** a=10ϕ@150C/C b=10ϕ@150C/C c=8ϕ@450C/C d=8ϕ@750C/C e=8ϕ@750C/C
SWC–08	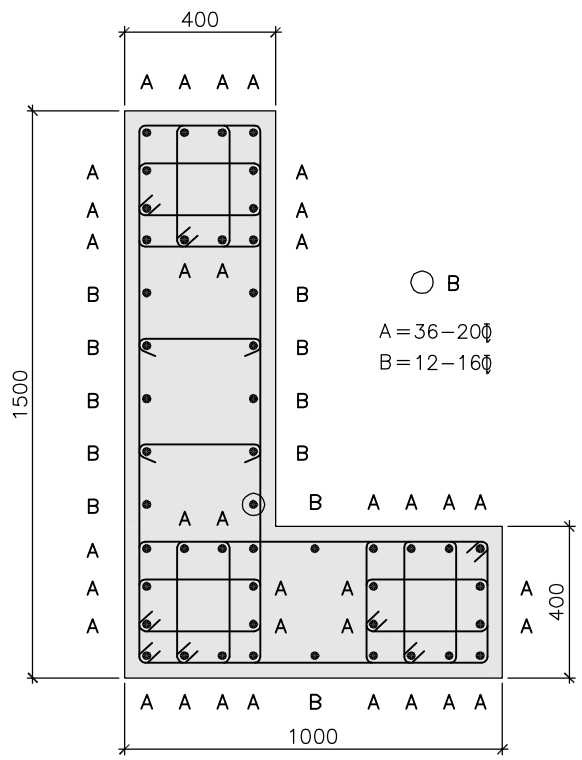	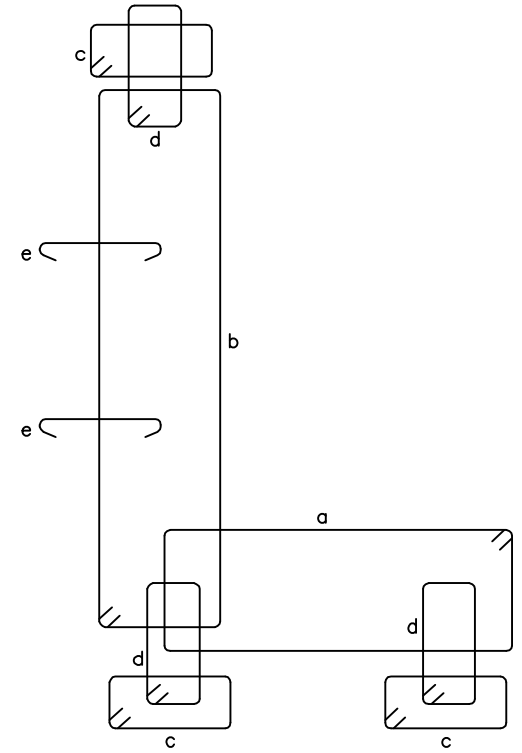 **TIE AT ZONE–01** a=10ϕ@100C/C b=10ϕ@100C/C c=8ϕ@300C/C d=8ϕ@500C/C e=8ϕ@500C/C **TIE AT ZONE–02** a=10ϕ@150C/C b=10ϕ@150C/C c=8ϕ@450C/C d=8ϕ@750C/C e=8ϕ@750C/C

RELATED DRAWINGS:

1. TCE.10477A–CV–1007–RC–1001
2. TCE.10477A–CV–1007–RC–1002
3. TCE.10477A–CV–1007–RC–1003
4. TCE.10477A–CV–1007–RC–1004
5. TCE.10477A–CV–1007–RC–1005
6. TCE.10477A–CV–1007–RC–1007
7. TCE.10477A–CV–1007–RC–1008
8. TCE.10477A–CV–1007–RC–1009

NOTES:

1. ALL DIMENSIONS AND LEVELS ARE IN mm U.N.O.
2. ONLY FIGURED DIMENSIONS ARE TO BE FOLLOWED, NOT TO BE MEASURED.
3. GRADE OF CONCRETE SHALL BE OF M25(1:1:2) U.N.O.
4. GRADE OF REINFORCEMENT STEEL SHALL BE OF Fe500
5. THESE DRAWINGS ARE THE PROPERTY OF M/S TATA CONSULTING ENGINEERS LIMITED. THOSE SHALL NOT BE COPIED, TRANSFERRED, MODIFIED OR USED FOR ANY PURPOSE OTHER THAN FOR THE PLANNING AND CONSTRUCTION OF "INTEGRATED COMMAND CONTROL CENTRE PROJECT AT PANJABARI, GUWAHATI"
6. DE–SHUTTERING PERIOD SHALL NOT BE LESS THAN SPECIFIED BELOW: –
   - a) VERTICAL FACES OF COLUMN, BEAM & WALL : 24 HOURS
   - b) SLAB (i) SPANNING UPTO 4.5m : 7 DAYS
   - (ii) SPANNING OVER 4.5m : 14 DAYS
   - c) BEAM (i) SPANNING UPTO 6.0m : 14 DAYS
   - (ii) SPANNING OVER 6.0m : 21 DAYS
8. CLEAR COVER TO THE MAIN REINFORCEMENT
   - a) FOUNDATION : 60mm
   - b) COLUMN UPTO PLINTH : 60mm
   - c) COLUMN ABOVE PLINTH : 40mm
   - d) BEAM : 25mm
   - e) WALL : 30mm
   - f) SLAB : 15–20mm
9. LAP & ANCHORAGE SHALL BE OF 50 TIMES OF BAR DIA.
10. NOT MORE THAN 50% OF THE BARS SHALL BE SPLICED AT ONE SECTION
11. USE SPACE BAR TO AVOID CONGESTION, WHEREVER NECESSARY.
12. ANY DISCREPANCY NOTED SHOULD BE BROUGHT TO THE NOTICE OF THE CONSULTANT.
13. THIS DRAWING SHALL BE READ IN CONJUNCTION WITH RELEVANT ARCHITECTURAL DRAWINGS.

TENDER PURPOSE ONLY

SIGN.													
INITIALS													
REVISIONS													
SIGN.													15.04.2020
INITIALS													
ISSUE	DRN	DSN	CHD	CV	EL	IC	ME	PL	HVAC	EXT	LS	PE/PM	APPD	DATE
				CLEARED									

GUWAHATI SMART CITY DEVELOPMENT AGENCY LTD.

SMART CITY MISSION GUWAHATI

DETAILS OF COLUMN
SECTIONAL DETAIL (SHEET 6 / 9)

TATA CONSULTING ENGINEERS LIMITED
MUMBAI

SCALE : N.T.S.	DWG NO. TCE.10477A–CV–1007–RC–1006	ISSUE R0
DC & DISC: –––		

SECTION MARK	SECTIONAL DETAIL	TIES DETAIL
SWC–09	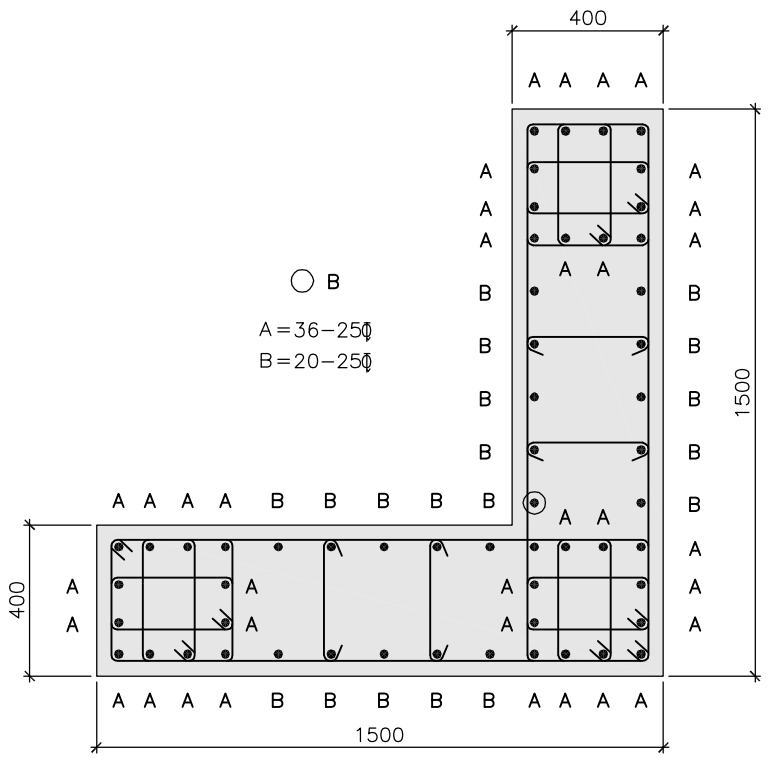	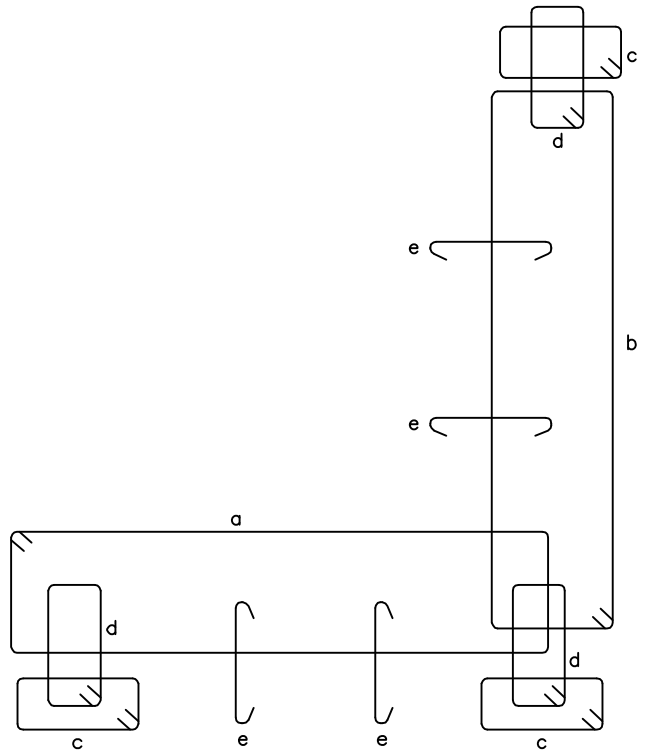 TIE AT ZONE–01 a=10Φ@100C/C b=10Φ@100C/C c=8Φ@300C/C d=8Φ@500C/C e=8Φ@500C/C TIE AT ZONE–02 a=10Φ@150C/C b=10Φ@150C/C c=8Φ@450C/C d=8Φ@750C/C e=8Φ@750C/C
SWC–10	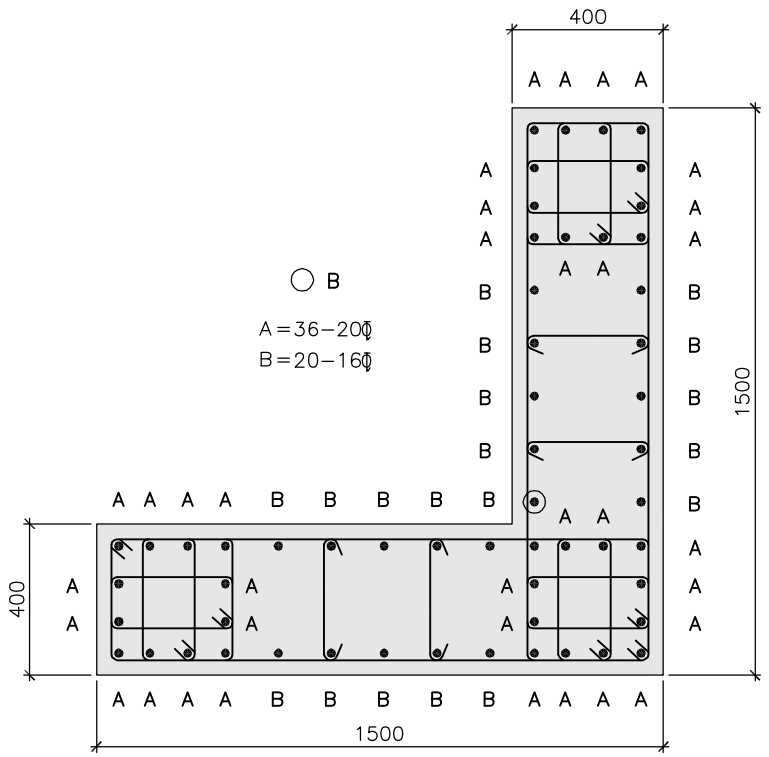	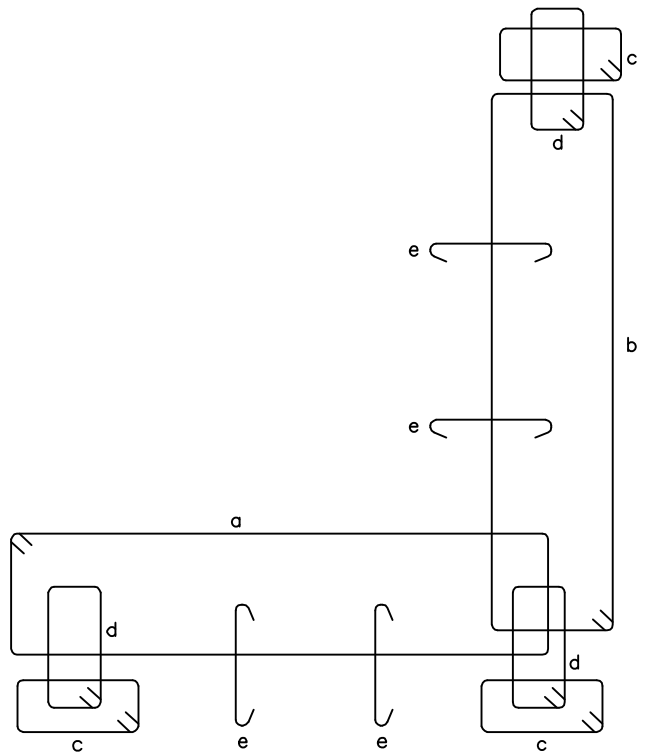 TIE AT ZONE–01 a=10Φ@100C/C b=10Φ@100C/C c=8Φ@300C/C d=8Φ@500C/C e=8Φ@500C/C TIE AT ZONE–02 a=10Φ@150C/C b=10Φ@150C/C c=8Φ@450C/C d=8Φ@750C/C e=8Φ@750C/C

RELATED DRAWINGS:

1. TCE.10477A–CV–1007–RC–1001
2. TCE.10477A–CV–1007–RC–1002
3. TCE.10477A–CV–1007–RC–1003
4. TCE.10477A–CV–1007–RC–1004
5. TCE.10477A–CV–1007–RC–1005
6. TCE.10477A–CV–1007–RC–1006
7. TCE.10477A–CV–1007–RC–1008
8. TCE.10477A–CV–1007–RC–1009

NOTES:

1. ALL DIMENSIONS AND LEVELS ARE IN mm U.N.O.
2. ONLY FIGURED DIMENSIONS ARE TO BE FOLLOWED, NOT TO BE MEASURED.
3. GRADE OF CONCRETE SHALL BE OF M25(1:1:2) U.N.O.
4. GRADE OF REINFORCEMENT STEEL SHALL BE OF Fe500
5. THESE DRAWINGS ARE THE PROPERTY OF M/S TATA CONSULTING ENGINEERS LIMITED. THOSE SHALL NOT BE COPIED, TRANSFERRED, MODIFIED OR USED FOR ANY PURPOSE OTHER THAN FOR THE PLANNING AND CONSTRUCTION OF "INTEGRATED COMMAND CONTROL CENTRE PROJECT AT PANJABARI, GUWAHATI"
6. DE–SHUTTERING PERIOD SHALL NOT BE LESS THAN SPECIFIED BELOW: –
   - a) VERTICAL FACES OF COLUMN, BEAM & WALL : 24 HOURS
   - b) SLAB (i) SPANNING UPTO 4.5m : 7 DAYS
   - (ii) SPANNING OVER 4.5m : 14 DAYS
   - c) BEAM (i) SPANNING UPTO 6.0m : 14 DAYS
   - (ii) SPANNING OVER 6.0m : 21 DAYS
8. CLEAR COVER TO THE MAIN REINFORCEMENT
   - a) FOUNDATION : 60mm
   - b) COLUMN UPTO PLINTH : 60mm
   - c) COLUMN ABOVE PLINTH : 40mm
   - d) BEAM : 25mm
   - e) WALL : 30mm
   - f) SLAB : 15–20mm
9. LAP & ANCHORAGE SHALL BE OF 50 TIMES OF BAR DIA.
10. NOT MORE THAN 50% OF THE BARS SHALL BE SPLICED AT ONE SECTION
11. USE SPACE BAR TO AVOID CONGESTION, WHEREVER NECESSARY.
12. ANY DISCREPANCY NOTED SHOULD BE BROUGHT TO THE NOTICE OF THE CONSULTANT.
13. THIS DRAWING SHALL BE READ IN CONJUNCTION WITH RELEVANT ARCHITECTURAL DRAWINGS.

TENDER PURPOSE ONLY

SIGN.													
INITIALS													
REVISIONS													
SIGN.													15.04.2020
INITIALS													
ISSUE	DRN	DSN	CHD	CV	EL	IC	ME	PL	HVAC	EXT	LS	PE/PM	APPD	DATE
				CLEARED									

GUWAHATI SMART CITY DEVELOPMENT AGENCY LTD.

SMART CITY MISSION GUWAHATI

DETAILS OF COLUMN
SECTIONAL DETAIL (SHEET 7 / 9)

TATA CONSULTING ENGINEERS LIMITED
MUMBAI

SCALE : N.T.S.	DWG NO. TCE.10477A–CV–1007–RC–1007	ISSUE R0
DC & DISC : –––		

SECTION MARK	SECTIONAL DETAIL	TIE AT ZONE-01	TIE AT ZONE-02
SEC.-01	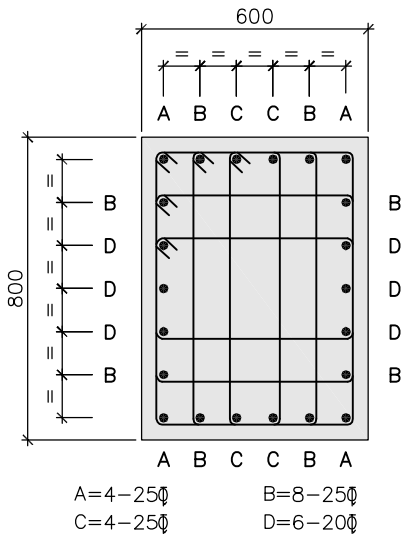	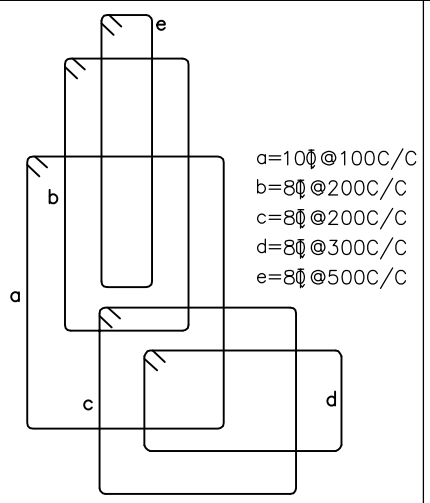	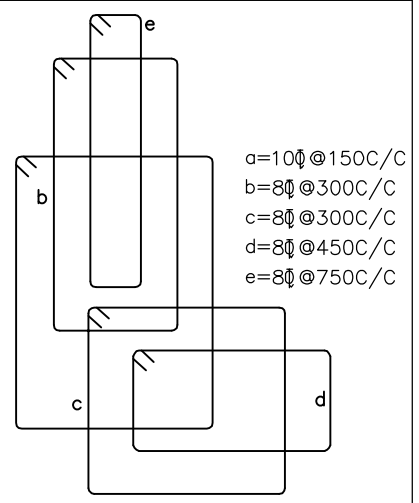
SEC.-02	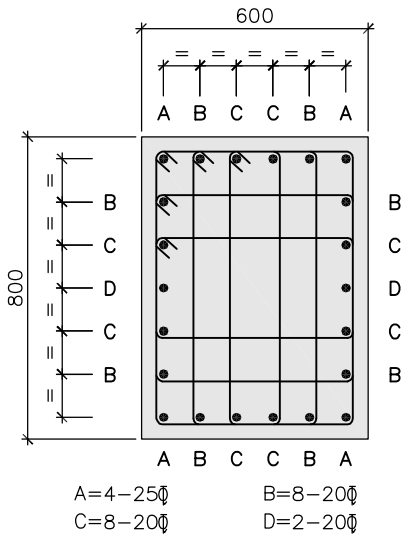	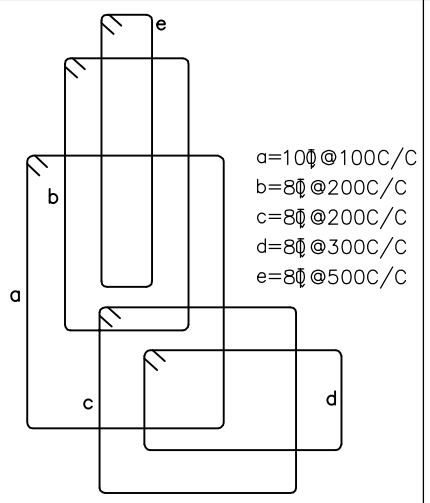	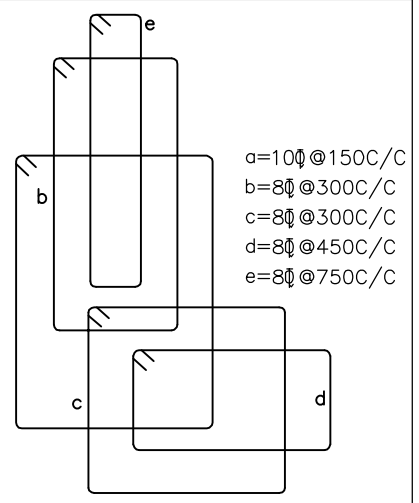
SEC.-03	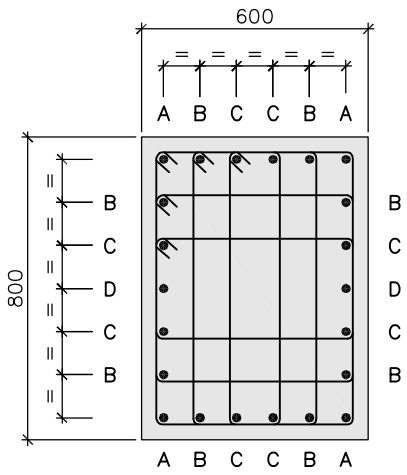	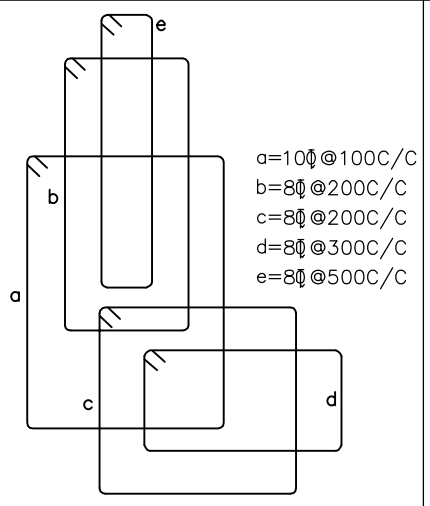	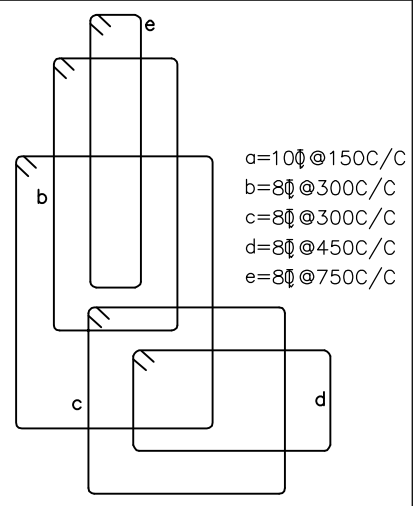

SECTION MARK	SECTIONAL DETAIL	TIE AT ZONE-01	TIE AT ZONE-02
SEC.-04	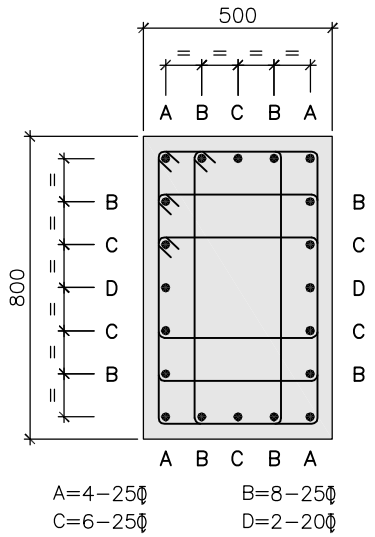	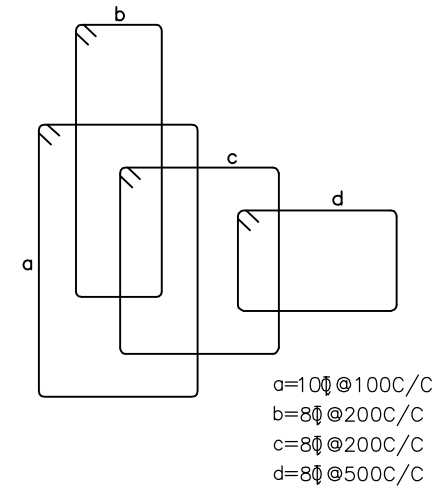	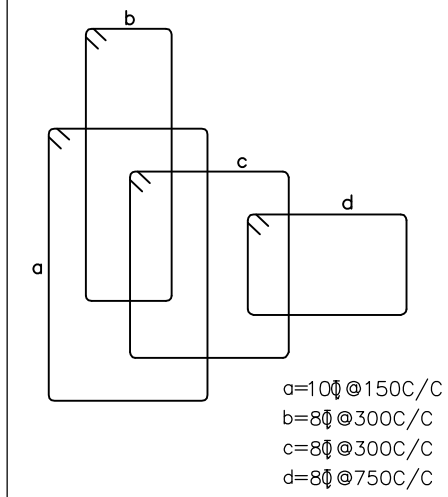
SEC.-05	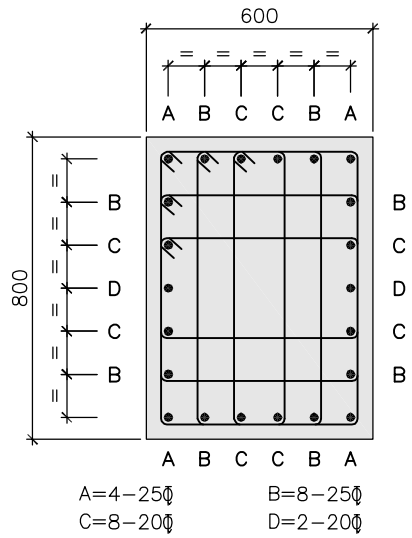	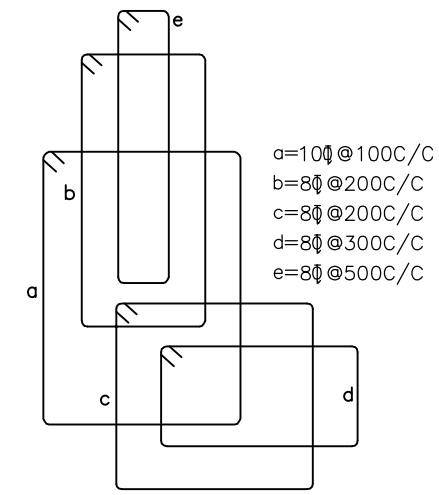	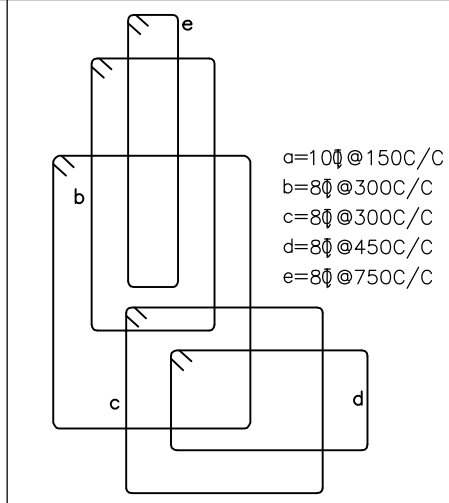
SEC.-06	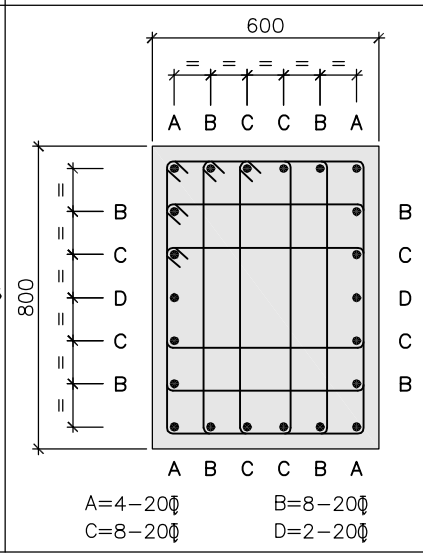	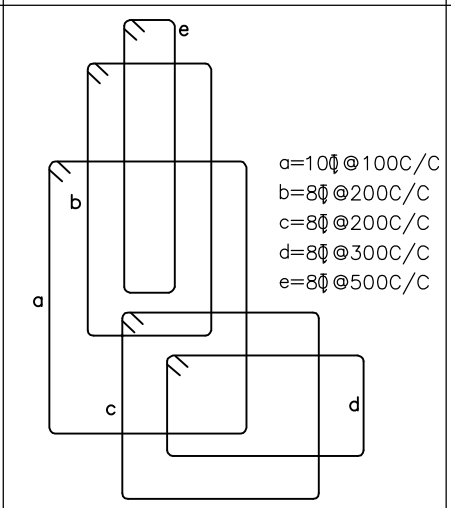	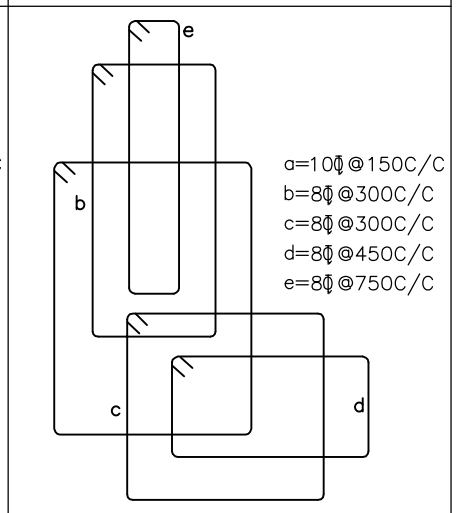

TENDER PURPOSE ONLY

RELATED DRAWINGS:

1. TCE.10477A-CV-1007-RC-1001
2. TCE.10477A-CV-1007-RC-1002
3. TCE.10477A-CV-1007-RC-1003
4. TCE.10477A-CV-1007-RC-1004
5. TCE.10477A-CV-1007-RC-1005
6. TCE.10477A-CV-1007-RC-1006
7. TCE.10477A-CV-1007-RC-1007
8. TCE.10477A-CV-1007-RC-1009

NOTES:

1. ALL DIMENSIONS AND LEVELS ARE IN mm U.N.O.
2. ONLY FIGURED DIMENSIONS ARE TO BE FOLLOWED, NOT TO BE MEASURED.
3. GRADE OF CONCRETE SHALL BE OF M25(1:1:2) U.N.O.
4. GRADE OF REINFORCEMENT STEEL SHALL BE OF Fe500
5. LAP & ANCHORAGE SHALL BE OF 50 TIMES OF BAR DIA.
6. NOT MORE THAN 50% OF THE BARS SHALL BE SPLICED AT ONE SECTION
7. USE SPACE BAR TO AVOID CONGESTION, WHEREVER NECESSARY.
8. ANY DISCREPANCY NOTED SHOULD BE BROUGHT TO THE NOTICE OF THE CONSULTANT.
9. THIS DRAWING SHALL BE READ IN CONJUNCTION WITH RELEVANT ARCHITECTURAL DRAWINGS.

SIGN.													
INITIALS													
REVISIONS													
SIGN.													15.04.2020
INITIALS													
ISSUE	DRN	DSN	CHD	CV	EL	IC	ME	PL	HVAC	EXT	LS	PE/PM	APPD	DATE
				CLEARED									

GUWAHATI SMART CITY DEVELOPMENT AGENCY LTD.

SMART CITY MISSION GUWAHATI

DETAILS OF COLUMN
SECTIONAL DETAIL (SHEET 8 / 9)

TATA CONSULTING ENGINEERS LIMITED
MUMBAI

SCALE : N.T.S.
DC & DISC : ---
DWG NO. TCE.10477A-CV-1007-RC-1008
ISSUE R0

SECTION MARK	SECTIONAL DETAIL	TIE AT ZONE–01	TIE AT ZONE–02
SEC.–07	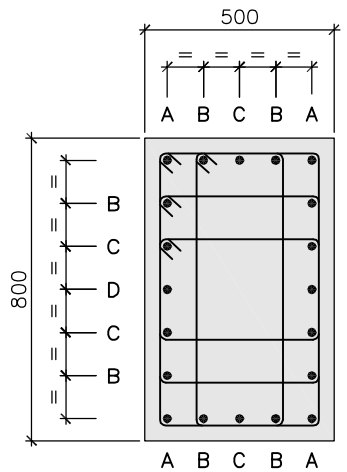 A=4–25ϕ B=8–25ϕ C=6–25ϕ D=2–25ϕ	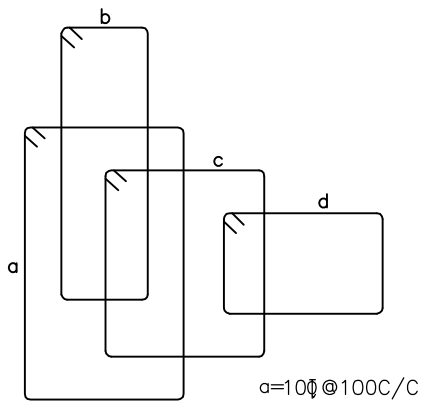 a=10ϕ@100C/C b=8ϕ@200C/C c=8ϕ@200C/C d=8ϕ@500C/C	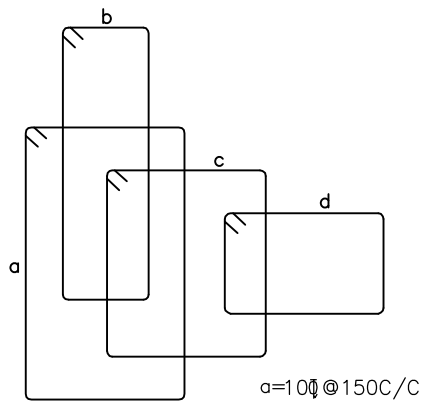 a=10ϕ@150C/C b=8ϕ@300C/C c=8ϕ@300C/C d=8ϕ@750C/C
SEC.–08	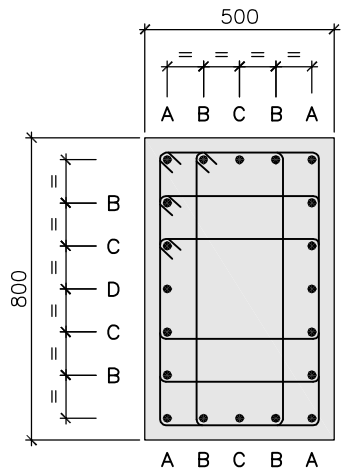 A=4–25ϕ B=8–25ϕ C=6–20ϕ D=2–20ϕ	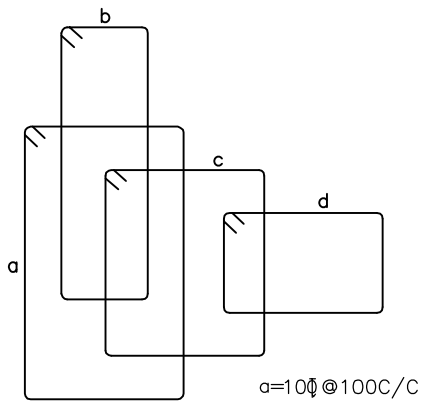 a=10ϕ@100C/C b=8ϕ@200C/C c=8ϕ@200C/C d=8ϕ@500C/C	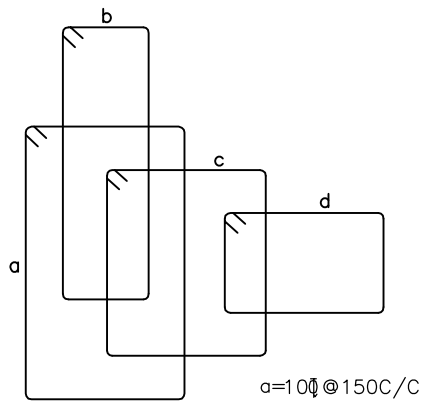 a=10ϕ@150C/C b=8ϕ@300C/C c=8ϕ@300C/C d=8ϕ@750C/C
SEC.–09	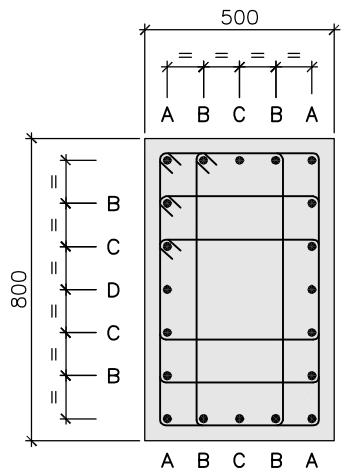 A=4–20ϕ B=8–16ϕ C=6–16ϕ D=2–16ϕ	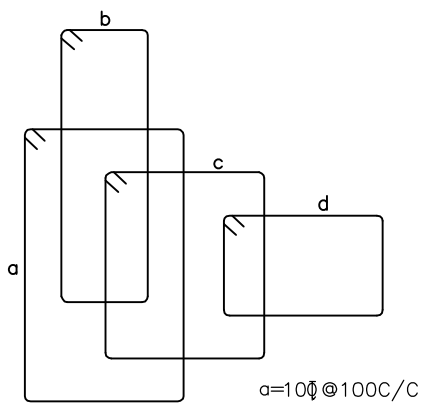 a=10ϕ@100C/C b=8ϕ@200C/C c=8ϕ@200C/C d=8ϕ@500C/C	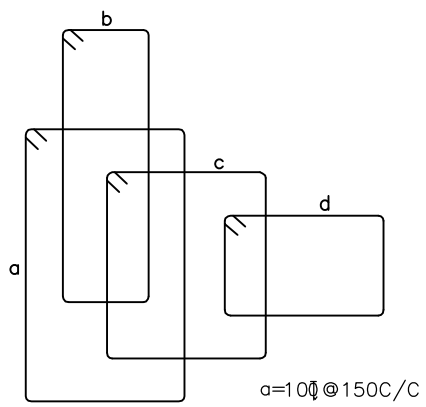 a=10ϕ@150C/C b=8ϕ@300C/C c=8ϕ@300C/C d=8ϕ@750C/C

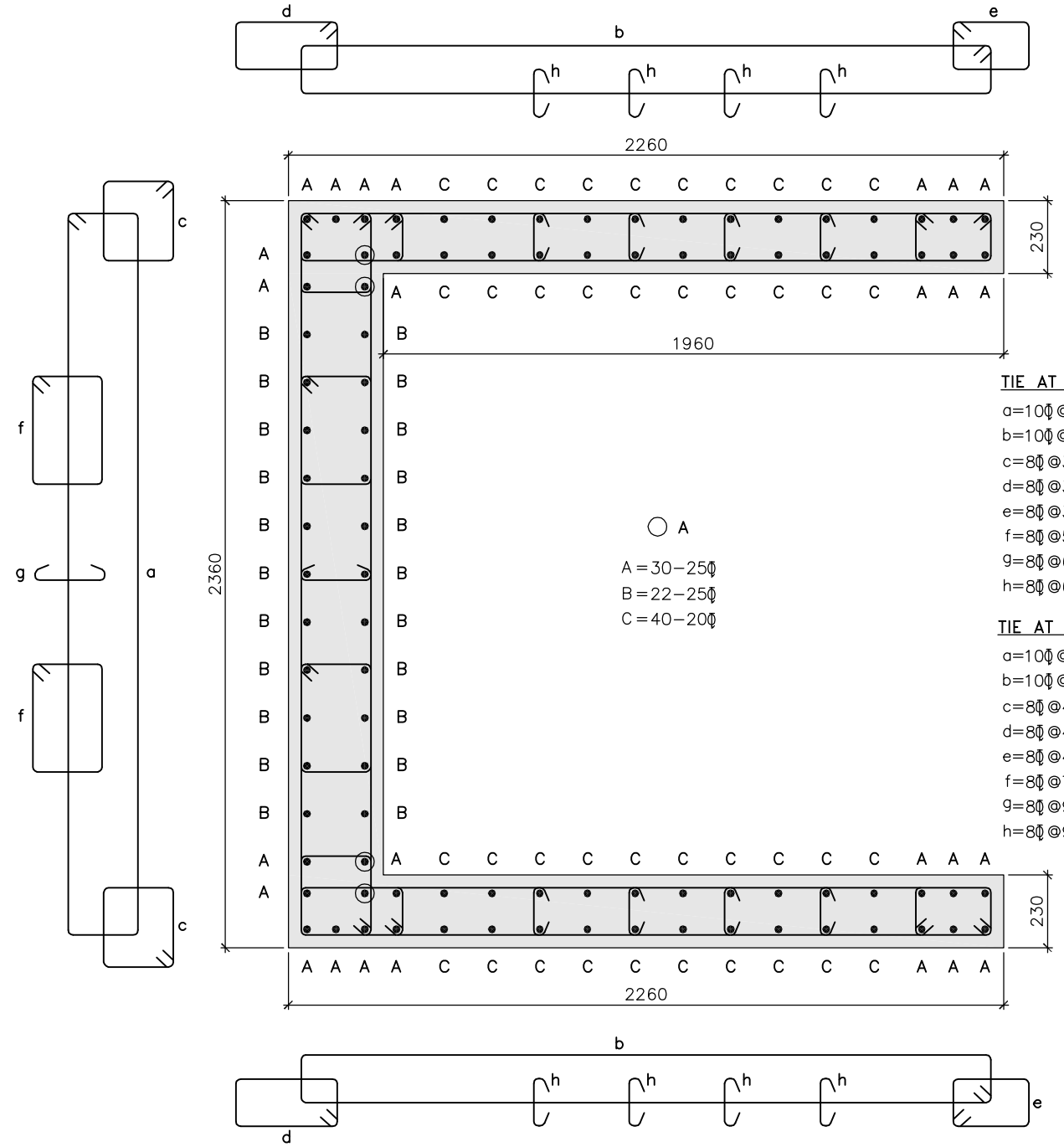

TIE AT ZONE–01

a=10ϕ@100C/C
b=10ϕ@100C/C
c=8ϕ@300C/C
d=8ϕ@300C/C
e=8ϕ@300C/C
f=8ϕ@500C/C
g=8ϕ@600C/C
h=8ϕ@600C/C

TIE AT ZONE–02

a=10ϕ@150C/C
b=10ϕ@150C/C
c=8ϕ@450C/C
d=8ϕ@450C/C
e=8ϕ@450C/C
f=8ϕ@750C/C
g=8ϕ@900C/C
h=8ϕ@900C/C

RELATED DRAWINGS:

1. TCE.10477A–CV–1007–RC–1001
2. TCE.10477A–CV–1007–RC–1002
3. TCE.10477A–CV–1007–RC–1003
4. TCE.10477A–CV–1007–RC–1004
5. TCE.10477A–CV–1007–RC–1005
6. TCE.10477A–CV–1007–RC–1006
7. TCE.10477A–CV–1007–RC–1007
8. TCE.10477A–CV–1007–RC–1008

NOTES:

1. ALL DIMENSIONS AND LEVELS ARE IN mm U.N.O.
2. ONLY FIGURED DIMENSIONS ARE TO BE FOLLOWED, NOT TO BE MEASURED.
3. GRADE OF CONCRETE SHALL BE OF M25(1:1:2) U.N.O.
4. GRADE OF REINFORCEMENT STEEL SHALL BE OF Fe500
5. LAP & ANCHORAGE SHALL BE OF 50 TIMES OF BAR DIA.
6. NOT MORE THAN 50% OF THE BARS SHALL BE SPLICED AT ONE SECTION
7. USE SPACE BAR TO AVOID CONGESTION, WHEREVER NECESSARY.
8. ANY DISCREPANCY NOTED SHOULD BE BROUGHT TO THE NOTICE OF THE CONSULTANT.
9. THIS DRAWING SHALL BE READ IN CONJUNCTION WITH RELEVANT ARCHITECTURAL DRAWINGS.

TENDER PURPOSE ONLY

SIGN.													
INITIALS													
REVISIONS													
SIGN.													15.04.2020
INITIALS													
ISSUE	DRN	DSN	CHD	CV	EL	IC	ME	PL	HVAC	EXT	LS	PE/PM	APPD	DATE
				CLEARED									

GUWAHATI SMART CITY DEVELOPMENT AGENCY LTD.
SMART CITY MISSION GUWAHATI

DETAILS OF COLUMN
SECTIONAL DETAIL (SHEET 9 / 9)

TATA CONSULTING ENGINEERS LIMITED
MUMBAI

SCALE : N.T.S.
DC & DISC : ———
DWG NO. TCE.10477A–CV–1007–RC–1009
ISSUE R0

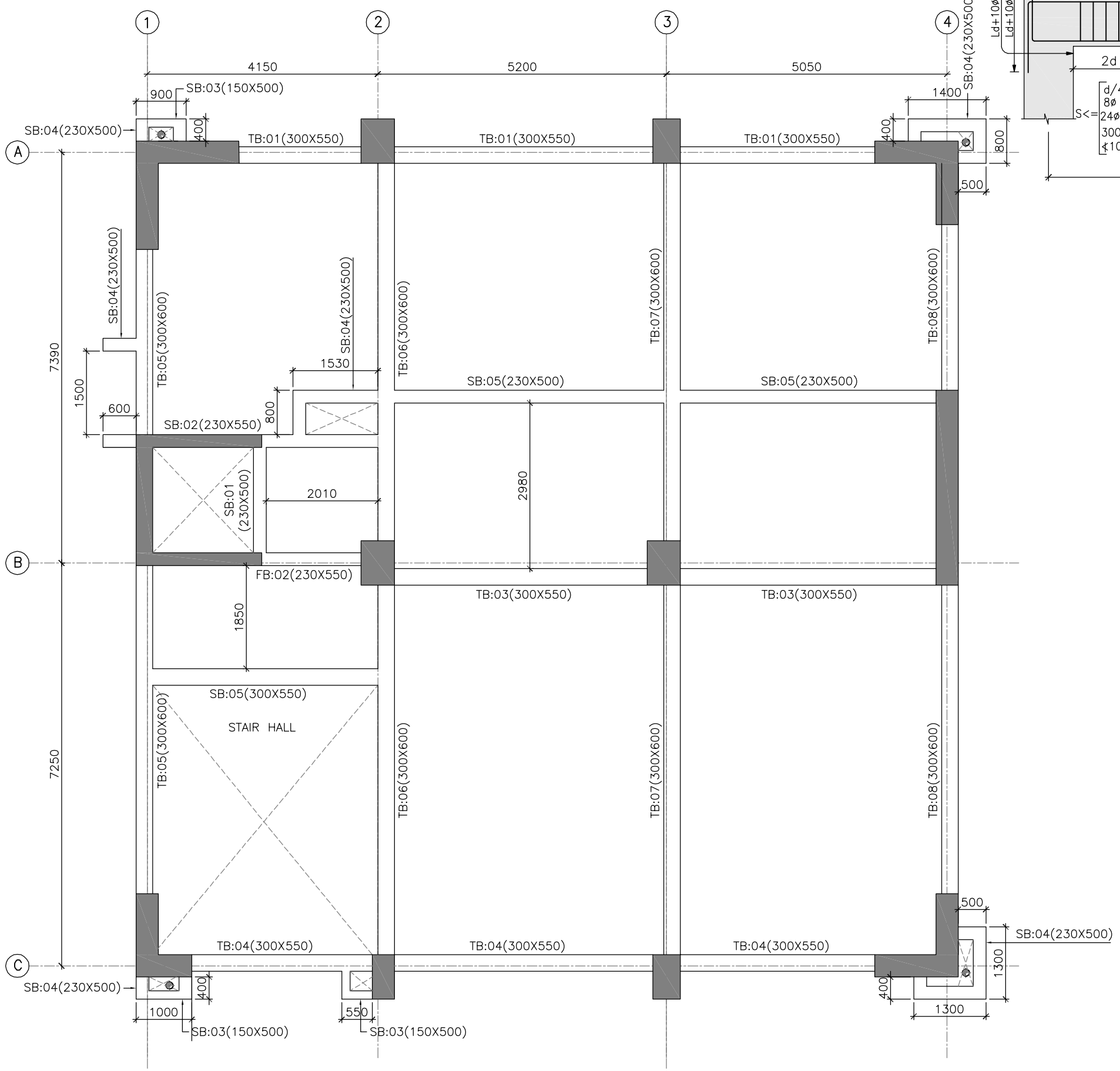

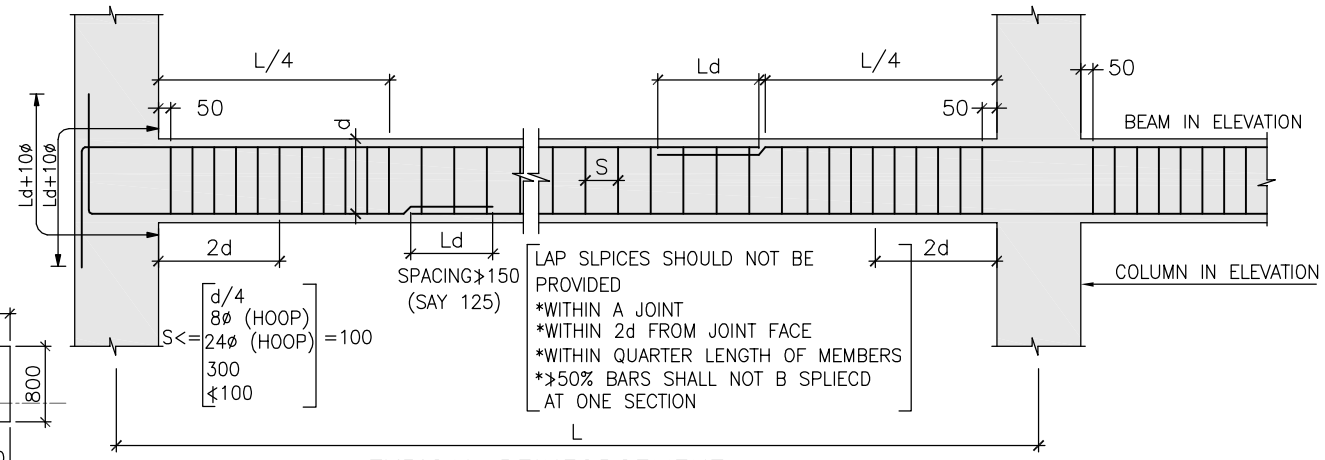

TYPICAL REINFORCEMENT DETAIL OF BEAM

NOTES:

1. ALL DIMENSIONS AND LEVELS ARE IN mm U.N.O.
2. ONLY FIGURED DIMENSIONS ARE TO BE FOLLOWED, NOT TO BE MEASURED.
3. GRADE OF CONCRETE SHALL BE OF M25(1:1:2) U.N.O.
4. GRADE OF REINFORCEMENT STEEL SHALL BE OF Fe500
5. THESE DRAWINGS ARE THE PROPERTY OF M/S TATA CONSULTING ENGINEERS LIMITED. THOSE SHALL NOT BE COPIED, TRANSFERRED, MODIFIED OR USED FOR ANY PURPOSE OTHER THAN FOR THE PLANNING AND CONSTRUCTION OF "INTEGRATED COMMAND CONTROL CENTRE PROJECT AT PANJABARI, GUWAHATI"
6. DE-SHUTTERING PERIOD SHALL NOT BE LESS THAN SPECIFIED BELOW:-
   - a) VERTICAL FACES OF COLUMN, BEAM & WALL : 24 HOURS
   - b) SLAB (i) SPANNING UPTO 4.5m : 7 DAYS
   - (ii) SPANNING OVER 4.5m : 14 DAYS
   - c) BEAM (i) SPANNING UPTO 6.0m : 14 DAYS
   - (ii) SPANNING OVER 6.0m : 21 DAYS
8. CLEAR COVER TO THE MAIN REINFORCEMENT
   - a) FOUNDATION : 60mm
   - b) COLUMN UPTO PLINTH : 60mm
   - c) COLUMN ABOVE PLINTH : 40mm
   - d) BEAM : 25mm
   - e) WALL : 30mm
   - f) SLAB : 15-20mm
9. LAP & ANCHORAGE SHALL BE OF 50 TIMES OF BAR DIA.
10. NOT MORE THAN 50% OF THE BARS SHALL BE SPLICED AT ONE SECTION
11. USE SPACE BAR TO AVOID CONGESTION, WHEREVER NECESSARY.
12. ANY DISCREPANCY NOTED SHOULD BE BROUGHT TO THE NOTICE OF THE CONSULTANT.
13. THIS DRAWING SHALL BE READ IN CONJUNCTION WITH RELEVANT ARCHITECTURAL DRAWINGS.

RELATED DRAWINGS:

1. TCE.10477A-CV-1007-RC-1001
2. TCE.10477A-CV-1007-RC-1011

TENDER PURPOSE ONLY

SIGN.													
INITIALS													
REVISIONS													
SIGN.													17.04.2020
INITIALS													
ISSUE	DRN	DSN	CHD	CV	EL	IC	ME	PL	HVAC	EXT	LS	PE/PM	APPD	DATE
				CLEARED									

GUWAHATI SMART CITY DEVELOPMENT AGENCY LTD.

SMART CITY MISSION GUWAHATI

DETAILS OF TIE BEAM
BEAM LAYOUT (SHEET 1 / 2)

TATA CONSULTING ENGINEERS LIMITED
MUMBAI

SCALE : AS NOTED	DWG NO. TCE.10477A-CV-1007-RC-1010	ISSUE R0
DC & DISC: ---		

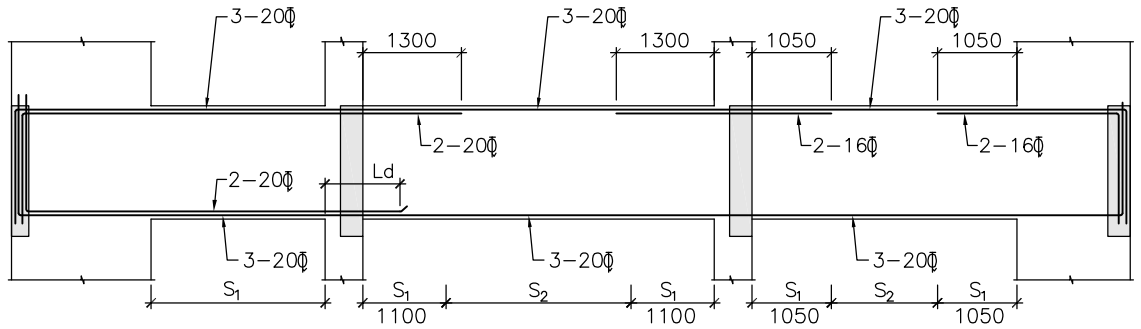

TB:01(300X550)

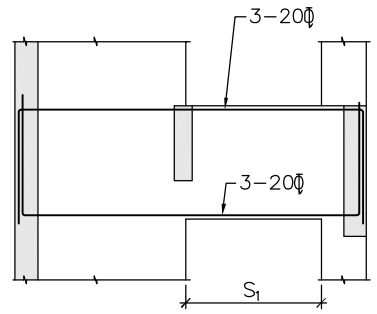

TB:02(230X550)

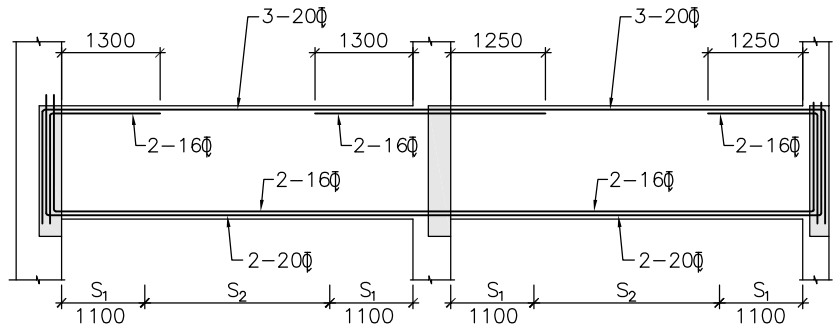

TB:03(300X550)

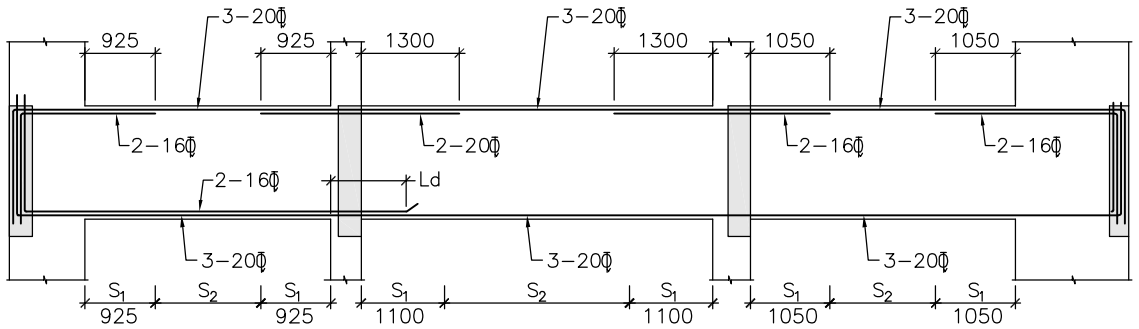

TB:04(300X550)

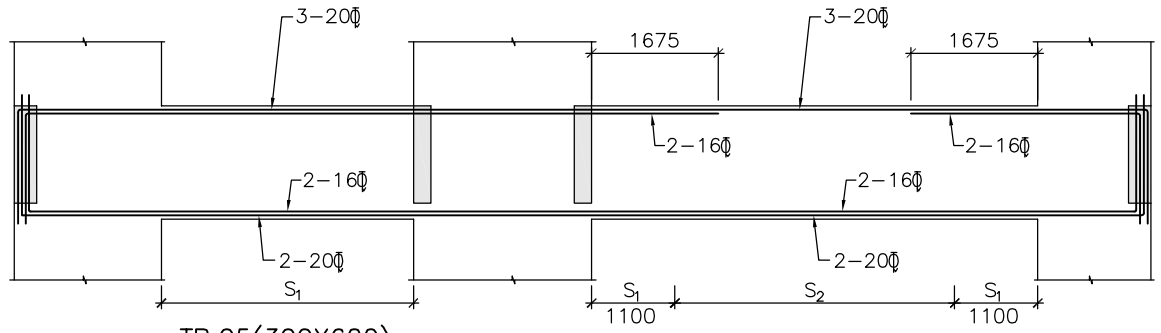

TB:05(300X600)

RELATED DRAWINGS:

1. TCE.10477A-CV-1007-RC-1001
2. TCE.10477A-CV-1007-RC-1010

LEGEND:

S_1=2L 8Φ@100C/C STP.
S_2=2L 8Φ@150C/C STP.

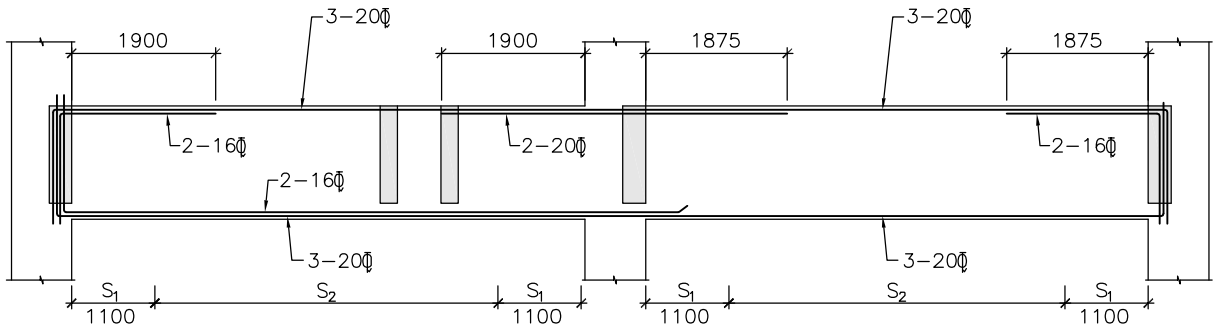

TB:06(300X600)

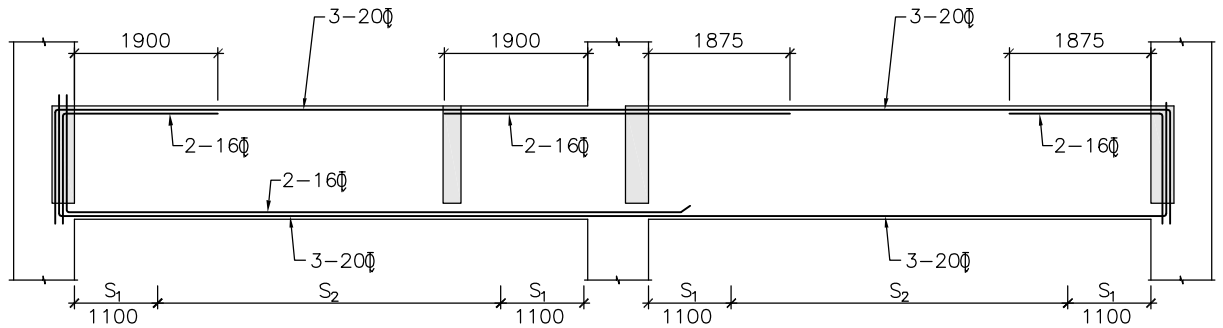

TB:07(300X600)

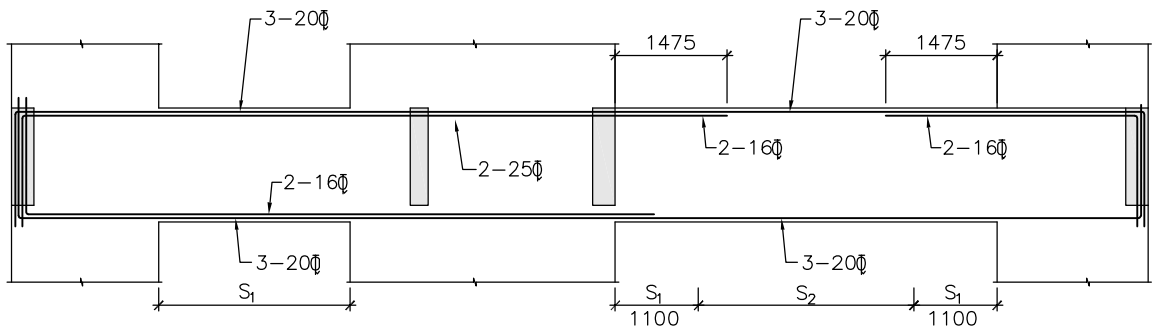

TB:08(300X600)

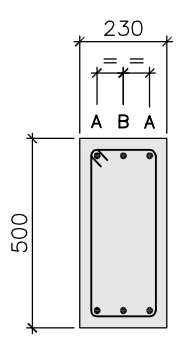

A=4-20Φ
B=2-16Φ
2L 8Φ@100C/C STP.

DETAIL OF SB-01

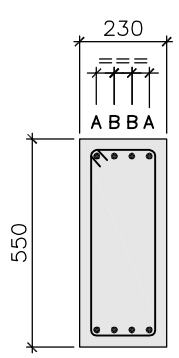

A=4-20Φ
B=4-20Φ
2L 8Φ@100C/C STP.

DETAIL OF SB-02

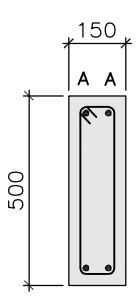

A=4-16Φ
2L 8Φ@125C/C STP.

DETAIL OF SB-03

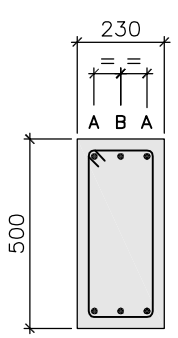

A=4-16Φ
B=2-16Φ
2L 8Φ@100C/C STP.

DETAIL OF SB-04

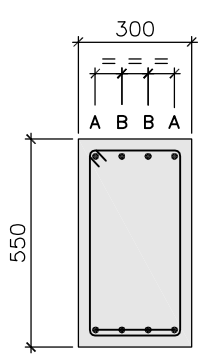

A=4-20Φ
B=4-20Φ
2L 8Φ@100C/C STP.

DETAIL OF SB-05

NOTES:

1. ALL DIMENSIONS AND LEVELS ARE IN mm U.N.O.
2. ONLY FIGURED DIMENSIONS ARE TO BE FOLLOWED, NOT TO BE MEASURED.
3. GRADE OF CONCRETE SHALL BE OF M25(1:1:2) U.N.O.
4. GRADE OF REINFORCEMENT STEEL SHALL BE OF Fe500
5. THESE DRAWINGS ARE THE PROPERTY OF M/S TATA CONSULTING ENGINEERS LIMITED. THOSE SHALL NOT BE COPIED, TRANSFERRED, MODIFIED OR USED FOR ANY PURPOSE OTHER THAN FOR THE PLANNING AND CONSTRUCTION OF "INTEGRATED COMMAND CONTROL CENTRE PROJECT AT PANJABARI, GUWAHATI"
6. DE-SHUTTERING PERIOD SHALL NOT BE LESS THAN SPECIFIED BELOW:-

a) VERTICAL FACES OF COLUMN, BEAM & WALL			:	24 HOURS
b) SLAB	(i)	SPANNING UPTO 4.5m	:	7 DAYS
	(ii)	SPANNING OVER 4.5m	:	14 DAYS
c) BEAM	(i)	SPANNING UPTO 6.0m	:	14 DAYS
	(ii)	SPANNING OVER 6.0m	:	21 DAYS

8. CLEAR COVER TO THE MAIN REINFORCEMENT

a) FOUNDATION	:	60mm
b) COLUMN UPTO PLINTH	:	60mm
c) COLUMN ABOVE PLINTH	:	40mm
d) BEAM	:	25mm
e) WALL	:	30mm
f) SLAB	:	15-20mm

9. LAP & ANCHORAGE SHALL BE OF 50 TIMES OF BAR DIA.
10. NOT MORE THAN 50% OF THE BARS SHALL BE SPLICED AT ONE SECTION
11. USE SPACE BAR TO AVOID CONGESTION, WHEREVER NECESSARY.
12. ANY DISCREPANCY NOTED SHOULD BE BROUGHT TO THE NOTICE OF THE CONSULTANT.
13. THIS DRAWING SHALL BE READ IN CONJUNCTION WITH RELEVANT ARCHITECTURAL DRAWINGS.

TENDER PURPOSE ONLY

SIGN.													
INITIALS													
REVISIONS													
SIGN.													17.04.2020
INITIALS													
ISSUE	DRN	DSN	CHD	CV	EL	IC	ME	PL	HVAC	EXT	LS	PE/PM	APPD	DATE
				CLEARED										

GUWAHATI SMART CITY DEVELOPMENT AGENCY LTD.
SMART CITY MISSION GUWAHATI

DETAILS OF TIE BEAM
L SECTION (SHEET 2 / 2)

TATA CONSULTING ENGINEERS LIMITED
MUMBAI

SCALE : AS NOTED
DC & DISC: ---
DWG NO. TCE.10477A-CV-1007-RC-1011
ISSUE R0

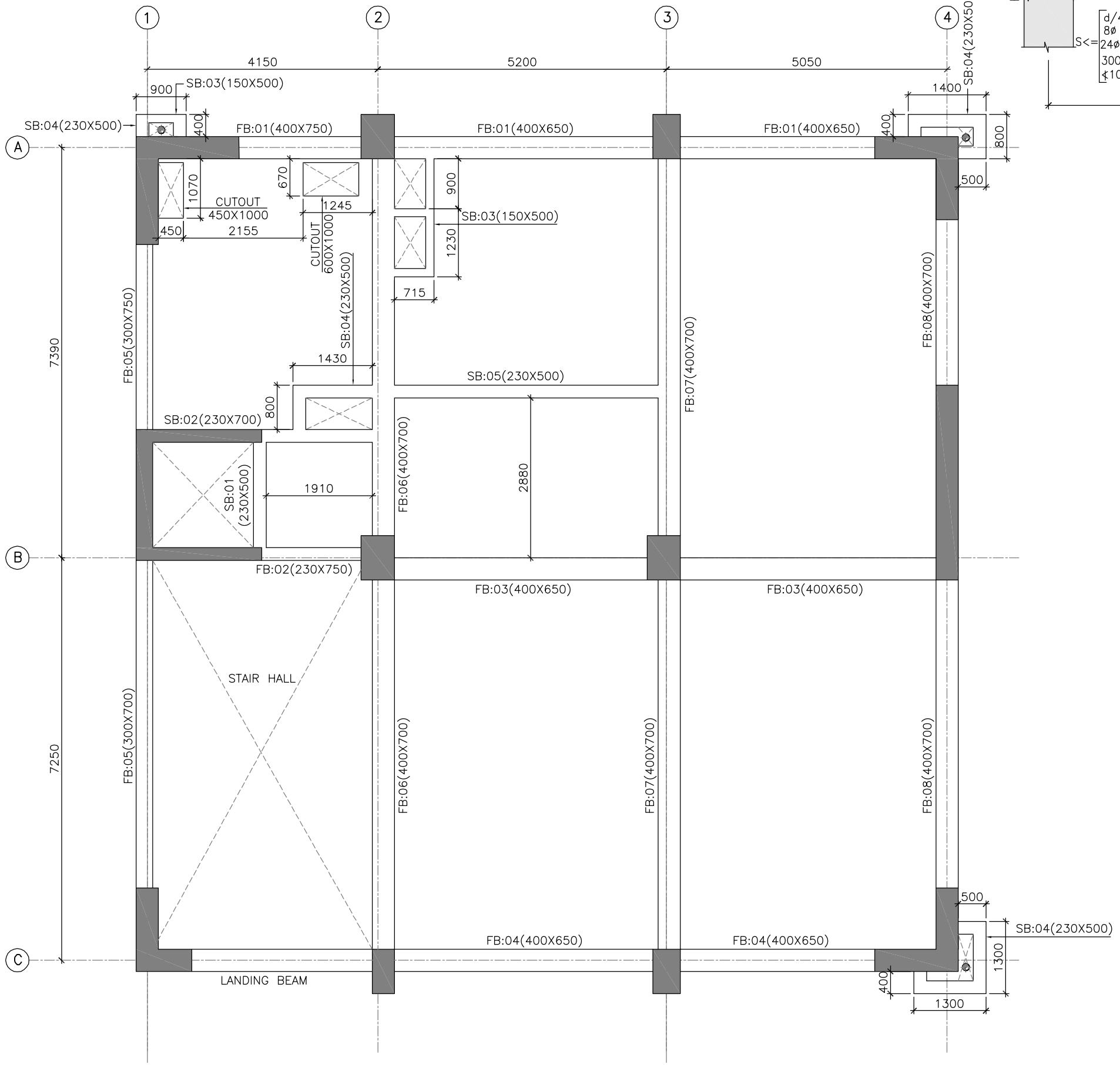

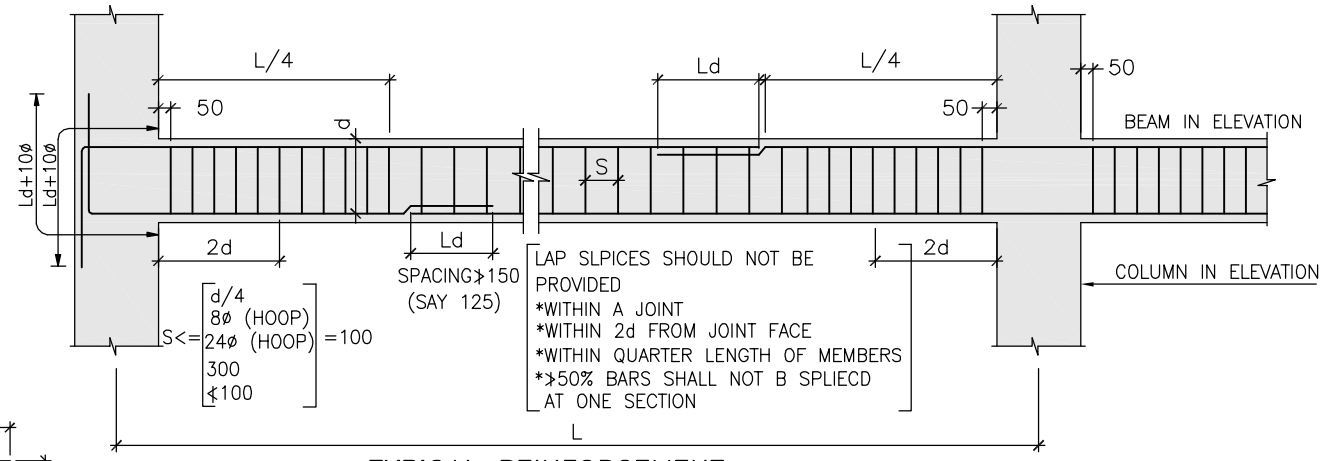

TYPICAL REINFORCEMENT DETAIL OF BEAM

NOTES:

1. ALL DIMENSIONS AND LEVELS ARE IN mm U.N.O.
2. ONLY FIGURED DIMENSIONS ARE TO BE FOLLOWED, NOT TO BE MEASURED.
3. GRADE OF CONCRETE SHALL BE OF M25(1:1:2) U.N.O.
4. GRADE OF REINFORCEMENT STEEL SHALL BE OF Fe500
5. THESE DRAWINGS ARE THE PROPERTY OF M/S TATA CONSULTING ENGINEERS LIMITED. THOSE SHALL NOT BE COPIED, TRANSFERRED, MODIFIED OR USED FOR ANY PURPOSE OTHER THAN FOR THE PLANNING AND CONSTRUCTION OF "INTEGRATED COMMAND CONTROL CENTRE PROJECT AT PANJABARI, GUWAHATI"
6. DE-SHUTTERING PERIOD SHALL NOT BE LESS THAN SPECIFIED BELOW:-
   a) VERTICAL FACES OF COLUMN, BEAM & WALL : 24 HOURS
   b) SLAB (i) SPANNING UPTO 4.5m : 7 DAYS
      (ii) SPANNING OVER 4.5m : 14 DAYS
   c) BEAM (i) SPANNING UPTO 6.0m : 14 DAYS
      (ii) SPANNING OVER 6.0m : 21 DAYS
8. CLEAR COVER TO THE MAIN REINFORCEMENT
   a) FOUNDATION : 60mm
   b) COLUMN UPTO PLINTH : 60mm
   c) COLUMN ABOVE PLINTH : 40mm
   d) BEAM : 25mm
   e) WALL : 30mm
   f) SLAB : 15-20mm
9. LAP & ANCHORAGE SHALL BE OF 50 TIMES OF BAR DIA.
10. NOT MORE THAN 50% OF THE BARS SHALL BE SPLICED AT ONE SECTION
11. USE SPACE BAR TO AVOID CONGESTION, WHEREVER NECESSARY.
12. ANY DISCREPANCY NOTED SHOULD BE BROUGHT TO THE NOTICE OF THE CONSULTANT.
13. THIS DRAWING SHALL BE READ IN CONJUNCTION WITH RELEVANT ARCHITECTURAL DRAWINGS.

RELATED DRAWINGS:

1. TCE.10477A-CV-1007-RC-1001
2. TCE.10477A-CV-1007-RC-1013
3. TCE.10477A-CV-1007-RC-1024

TENDER PURPOSE ONLY

SIGN.														
INITIALS														
REVISIONS														
SIGN.														17.04.2020
INITIALS														
ISSUE	DRN	DSN	CHD	CV	EL	IC	ME	PL	HVAC	EXT	LS	PE/PM	APPD	DATE
				CLEARED										

GUWAHATI SMART CITY DEVELOPMENT AGENCY LTD.

SMART CITY MISSION GUWAHATI

DETAILS OF FIRST FLOOR BEAM
BEAM LAYOUT (SHEET 1 / 2)

TATA CONSULTING ENGINEERS LIMITED
MUMBAI

SCALE : AS NOTED
DC & DISC : ---
DWG NO. TCE.10477A-CV-1007-RC-1012
ISSUE R0

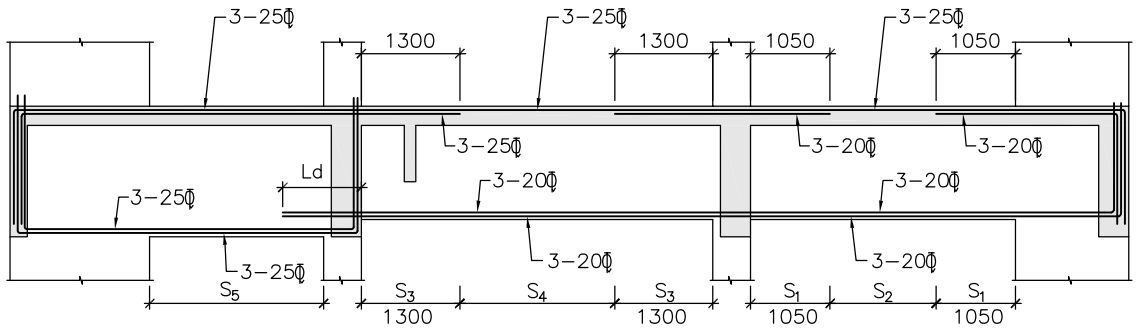

FB:01(400X750) FB:01(400X650) FB:01(400X650)

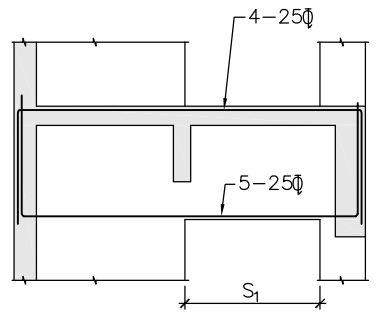

FB:02(230X750)

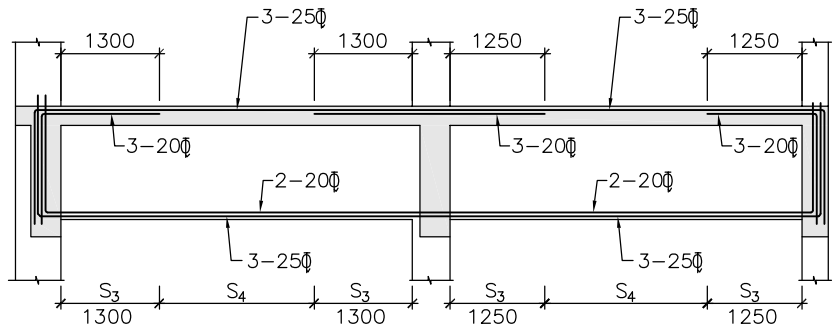

FB:03(400X650)

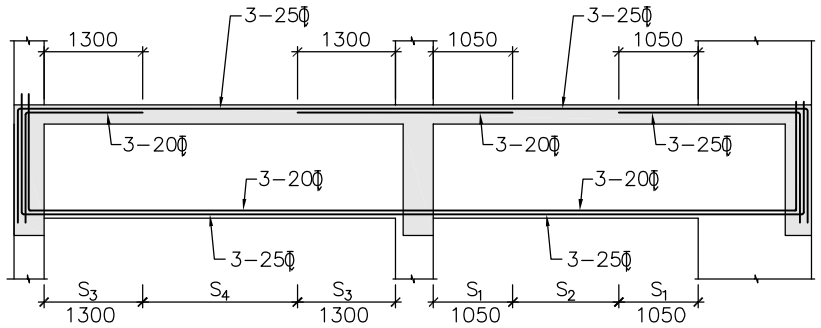

FB:04(400X650)

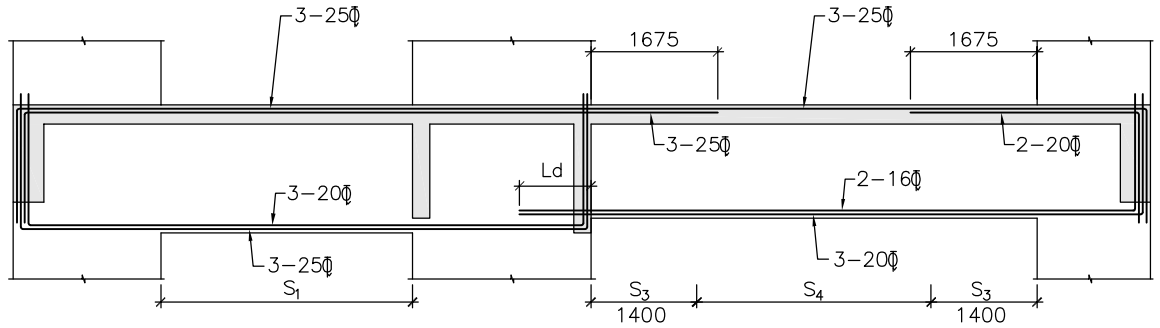

FB:05(300X750) FB:05(300X700)

RELATED DRAWINGS:

1. TCE.10477A-CV-1007-RC-1001
2. TCE.10477A-CV-1007-RC-1012
3. TCE.10477A-CV-1007-RC-1024

LEGEND:

S_1=2L 10Φ@100C/C STP.
S_2=2L 10Φ@150C/C STP.
S_3=2L 8Φ@100C/C STP.
S_4=2L 8Φ@150C/C STP.
S_5=4L 10Φ@100C/C STP.

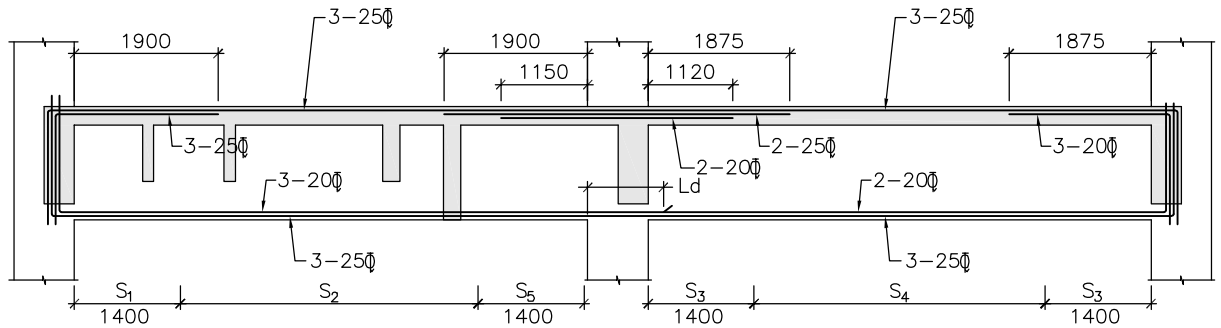

FB:06(400X700)

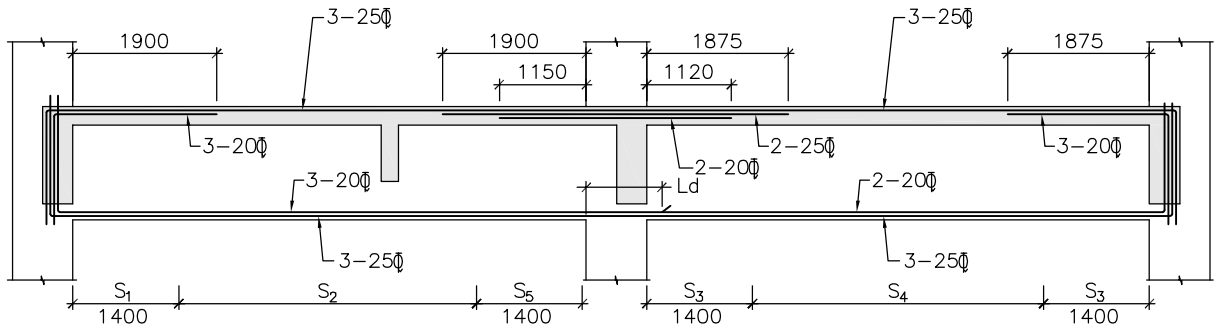

FB:07(400X700)

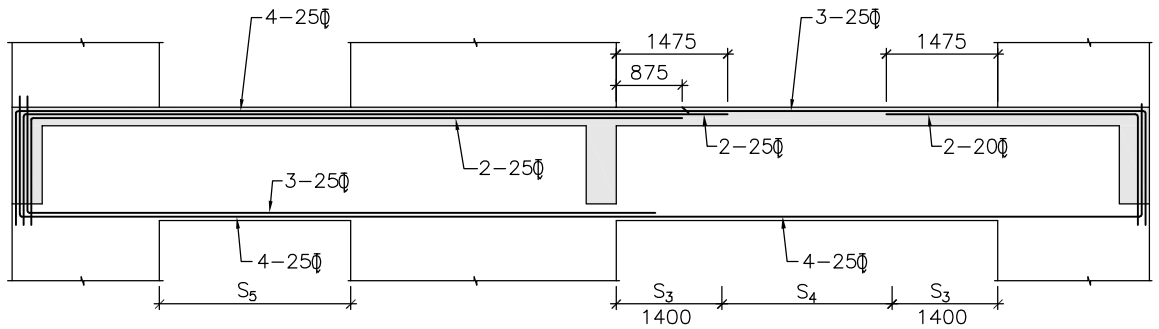

FB:08(400X700)

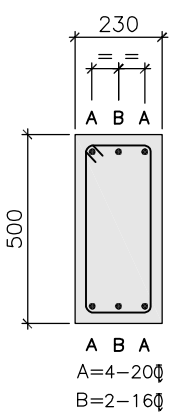

2L 8Φ@100C/C STP.

DETAIL OF SB-01

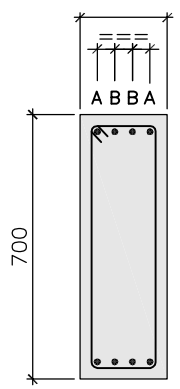

2L 8Φ@100C/C STP.

DETAIL OF SB-02

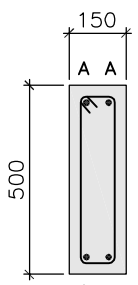

2L 8Φ@125C/C STP.

DETAIL OF SB-03

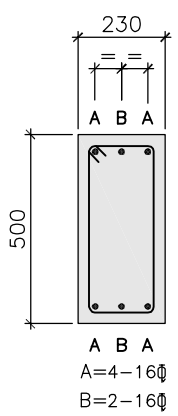

2L 8Φ@100C/C STP.

DETAIL OF SB-04

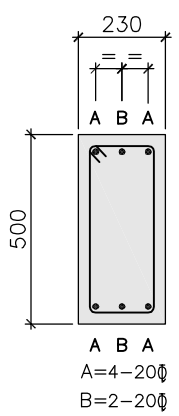

2L 8Φ@100C/C STP.

DETAIL OF SB-05

NOTES:

1. ALL DIMENSIONS AND LEVELS ARE IN mm U.N.O.
2. ONLY FIGURED DIMENSIONS ARE TO BE FOLLOWED, NOT TO BE MEASURED.
3. GRADE OF CONCRETE SHALL BE OF M25(1:1:2) U.N.O.
4. GRADE OF REINFORCEMENT STEEL SHALL BE OF Fe500
5. THESE DRAWINGS ARE THE PROPERTY OF M/S TATA CONSULTING ENGINEERS LIMITED. THOSE SHALL NOT BE COPIED, TRANSFERRED, MODIFIED OR USED FOR ANY PURPOSE OTHER THAN FOR THE PLANNING AND CONSTRUCTION OF "INTEGRATED COMMAND CONTROL CENTRE PROJECT AT PANJABARI, GUWAHATI"
6. DE-SHUTTERING PERIOD SHALL NOT BE LESS THAN SPECIFIED BELOW:-
   a) VERTICAL FACES OF COLUMN, BEAM & WALL : 24 HOURS
   b) SLAB (i) SPANNING UPTO 4.5m : 7 DAYS
      (ii) SPANNING OVER 4.5m : 14 DAYS
   c) BEAM (i) SPANNING UPTO 6.0m : 14 DAYS
      (ii) SPANNING OVER 6.0m : 21 DAYS
8. CLEAR COVER TO THE MAIN REINFORCEMENT
   a) FOUNDATION : 60mm
   b) COLUMN UPTO PLINTH : 60mm
   c) COLUMN ABOVE PLINTH : 40mm
   d) BEAM : 25mm
   e) WALL : 30mm
   f) SLAB : 15-20mm
9. LAP & ANCHORAGE SHALL BE OF 50 TIMES OF BAR DIA.
10. NOT MORE THAN 50% OF THE BARS SHALL BE SPLICED AT ONE SECTION
11. USE SPACE BAR TO AVOID CONGESTION, WHEREVER NECESSARY.
12. ANY DISCREPANCY NOTED SHOULD BE BROUGHT TO THE NOTICE OF THE CONSULTANT.
13. THIS DRAWING SHALL BE READ IN CONJUNCTION WITH RELEVANT ARCHITECTURAL DRAWINGS.

TENDER PURPOSE ONLY

SIGN.														
INITIALS														
REVISIONS														
SIGN.														17.04.2020
INITIALS														
ISSUE	DRN	DSN	CHD	CV	EL	IC	ME	PL	HVAC	EXT	LS	PE/PM	APPD	DATE
				CLEARED										

GUWAHATI SMART CITY DEVELOPMENT AGENCY LTD.

SMART CITY MISSION GUWAHATI

DETAILS OF FIRST FLOOR BEAM
L SECTION (SHEET 2 / 2)

TATA CONSULTING ENGINEERS LIMITED
MUMBAI

SCALE : AS NOTED
DC & DISC: ---
DWG NO. TCE.10477A-CV-1007-RC-1013
ISSUE R0

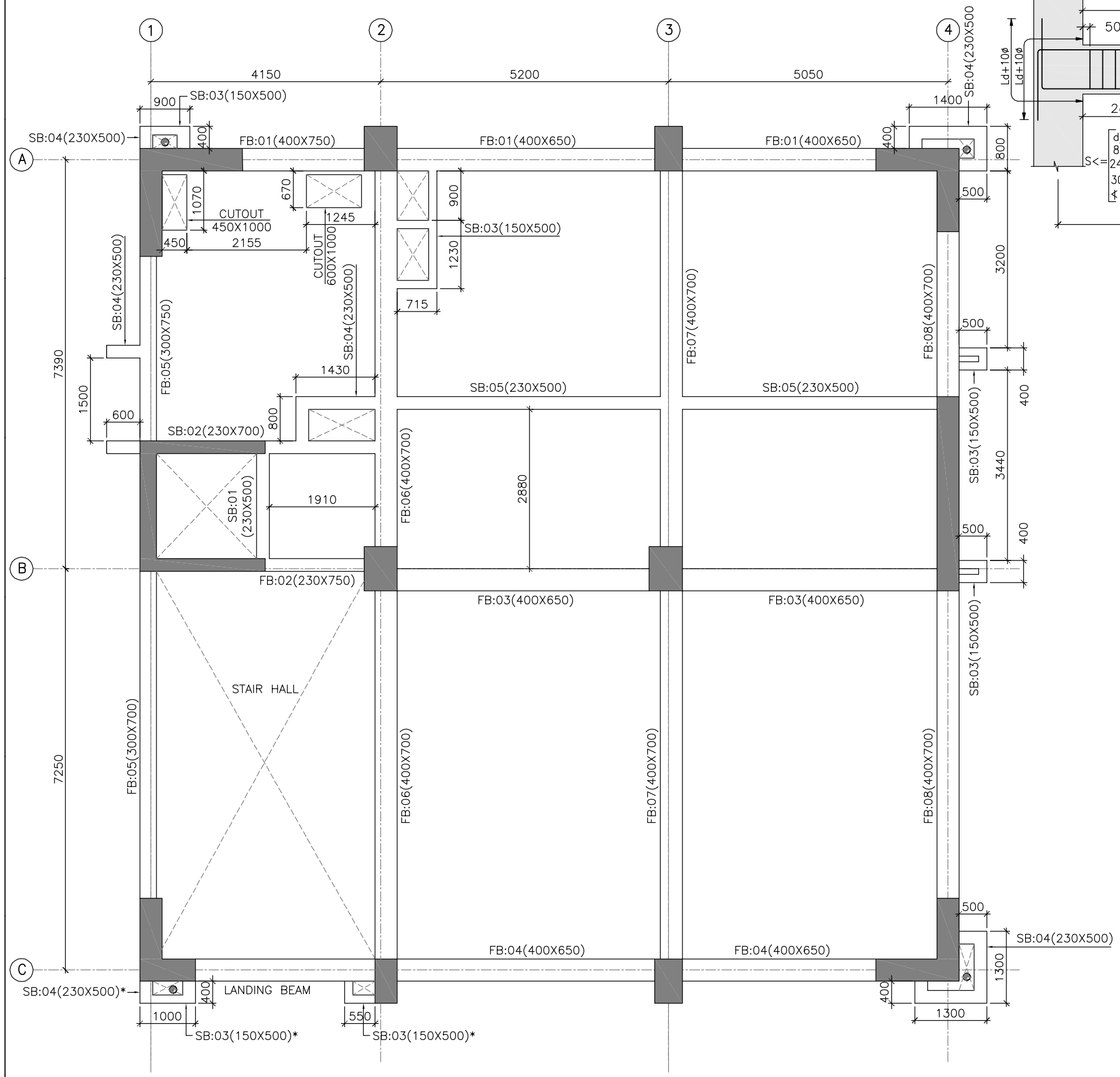

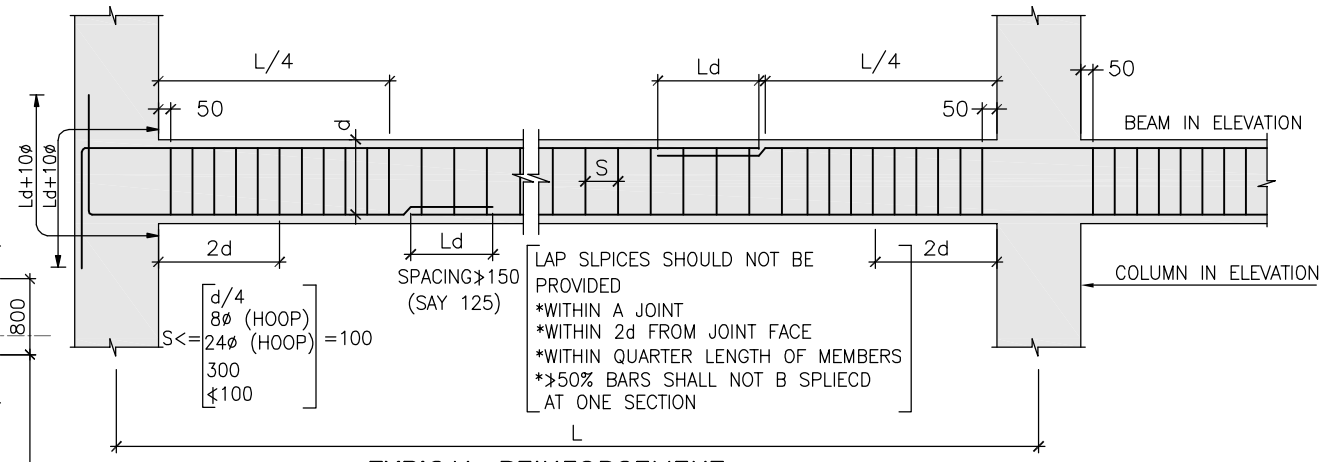

TYPICAL REINFORCEMENT DETAIL OF BEAM

NOTES:

1. ALL DIMENSIONS AND LEVELS ARE IN mm U.N.O.
2. ONLY FIGURED DIMENSIONS ARE TO BE FOLLOWED, NOT TO BE MEASURED.
3. GRADE OF CONCRETE SHALL BE OF M25(1:1:2) U.N.O.
4. GRADE OF REINFORCEMENT STEEL SHALL BE OF Fe500
5. THESE DRAWINGS ARE THE PROPERTY OF M/S TATA CONSULTING ENGINEERS LIMITED. THOSE SHALL NOT BE COPIED, TRANSFERRED, MODIFIED OR USED FOR ANY PURPOSE OTHER THAN FOR THE PLANNING AND CONSTRUCTION OF "INTEGRATED COMMAND CONTROL CENTRE PROJECT AT PANJABARI, GUWAHATI"
6. DE-SHUTTERING PERIOD SHALL NOT BE LESS THAN SPECIFIED BELOW:-
   - a) VERTICAL FACES OF COLUMN, BEAM & WALL : 24 HOURS
   - b) SLAB (i) SPANNING UPTO 4.5m : 7 DAYS
   - (ii) SPANNING OVER 4.5m : 14 DAYS
   - c) BEAM (i) SPANNING UPTO 6.0m : 14 DAYS
   - (ii) SPANNING OVER 6.0m : 21 DAYS
8. CLEAR COVER TO THE MAIN REINFORCEMENT
   - a) FOUNDATION : 60mm
   - b) COLUMN UPTO PLINTH : 60mm
   - c) COLUMN ABOVE PLINTH : 40mm
   - d) BEAM : 25mm
   - e) WALL : 30mm
   - f) SLAB : 15-20mm
9. LAP & ANCHORAGE SHALL BE OF 50 TIMES OF BAR DIA.
10. NOT MORE THAN 50% OF THE BARS SHALL BE SPLICED AT ONE SECTION
11. USE SPACE BAR TO AVOID CONGESTION, WHEREVER NECESSARY.
12. ANY DISCREPANCY NOTED SHOULD BE BROUGHT TO THE NOTICE OF THE CONSULTANT.
13. THIS DRAWING SHALL BE READ IN CONJUNCTION WITH RELEVANT ARCHITECTURAL DRAWINGS.

TENDER PURPOSE ONLY

BEAMS MARKED AS * SHALL BE PLACED AT LANDING LEVEL

RELATED DRAWINGS:

1. TCE.10477A-CV-1007-RC-1001
2. TCE.10477A-CV-1007-RC-1015
3. TCE.10477A-CV-1007-RC-1025

SIGN.													
INITIALS													
REVISIONS													
SIGN.													17.04.2020
INITIALS													
ISSUE	DRN	DSN	CHD	CV	EL	IC	ME	PL	HVAC	EXT	LS	PE/PM	APPD	DATE
				CLEARED										

GUWAHATI SMART CITY DEVELOPMENT AGENCY LTD.

SMART CITY MISSION GUWAHATI

DETAILS OF SECOND FLOOR BEAM
BEAM LAYOUT (SHEET 1 / 2)

TATA CONSULTING ENGINEERS LIMITED
MUMBAI

SCALE : AS NOTED
DC & DISC: ---
DWG NO. TCE.10477A-CV-1007-RC-1014
ISSUE R0

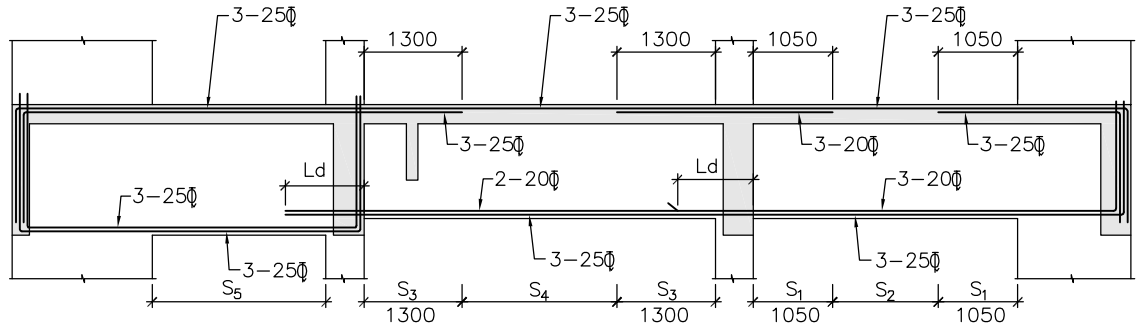

FB:01(400X750) FB:01(400X650) FB:01(400X650)

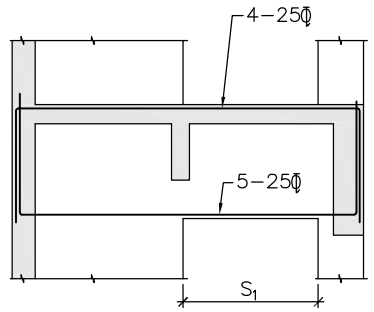

FB:02(230X750)

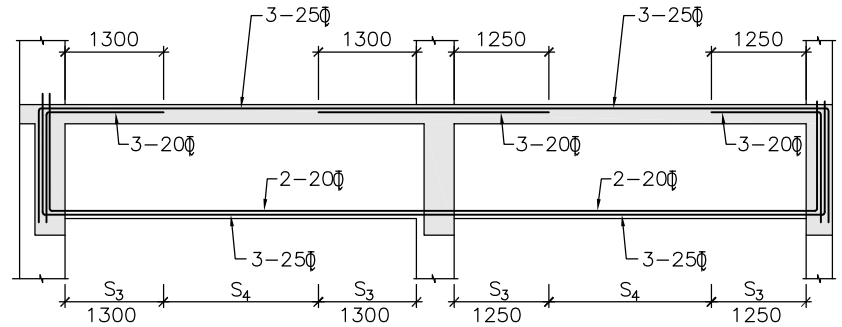

FB:03(400X650)

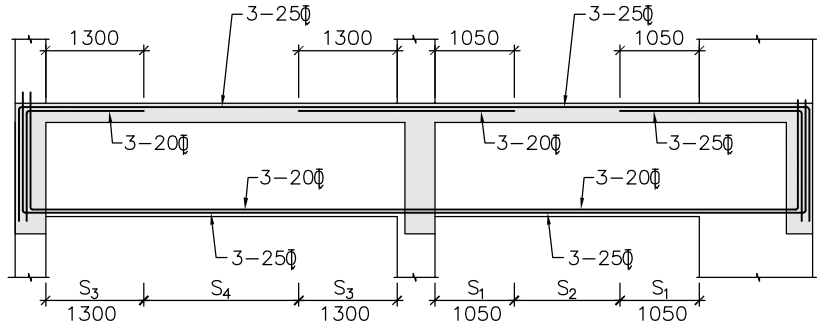

FB:04(400X650)

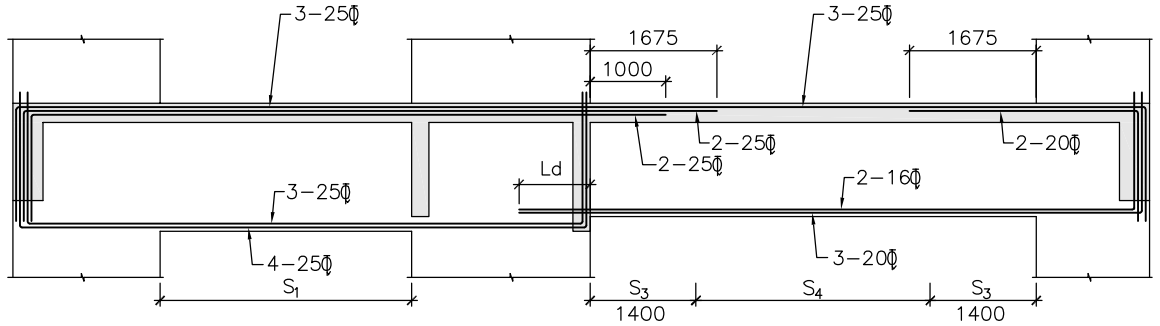

FB:05(300X750) FB:05(300X700)

RELATED DRAWINGS:

1. TCE.10477A-CV-1007-RC-1001
2. TCE.10477A-CV-1007-RC-1014
3. TCE.10477A-CV-1007-RC-1025

LEGEND:

S_1=2L 10Φ@100C/C STP.
S_2=2L 10Φ@150C/C STP.
S_3=2L 8Φ@100C/C STP.
S_4=2L 8Φ@150C/C STP.
S_5=4L 10Φ@100C/C STP.

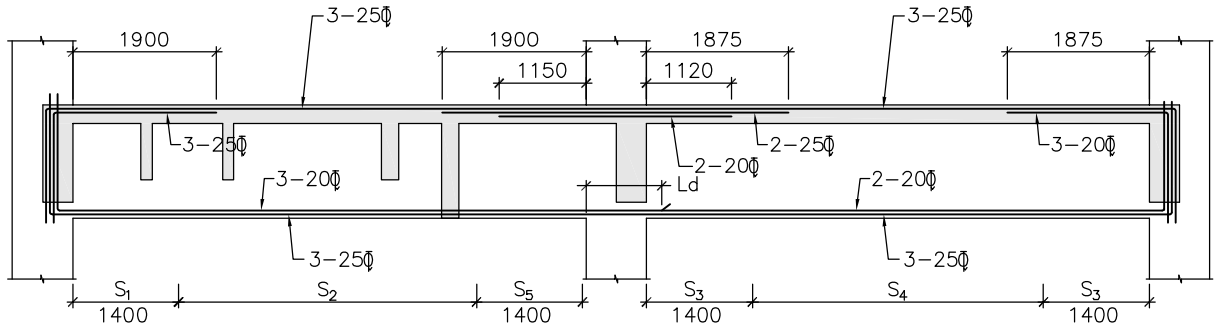

FB:06(400X700)

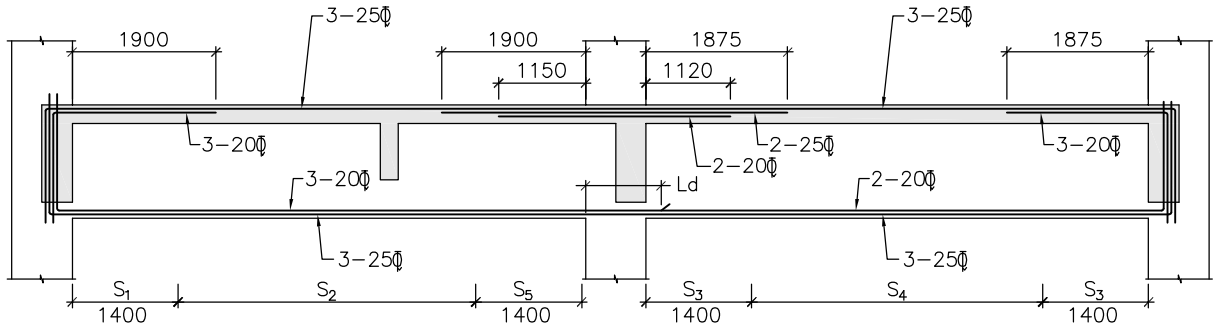

FB:07(400X700)

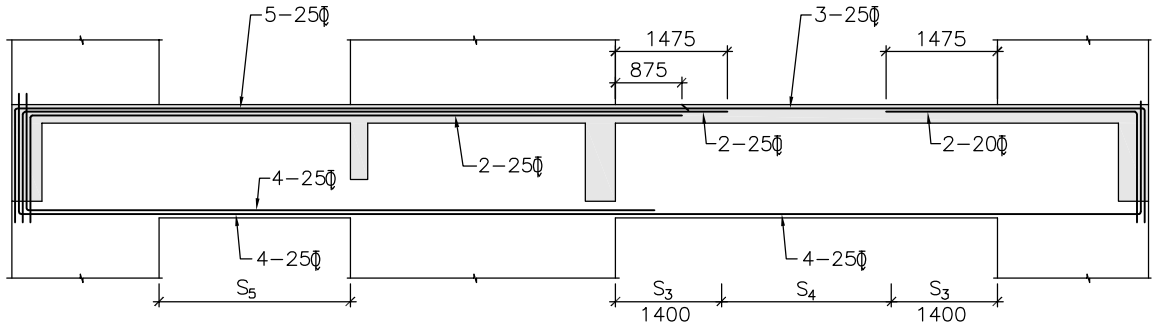

FB:08(400X700)

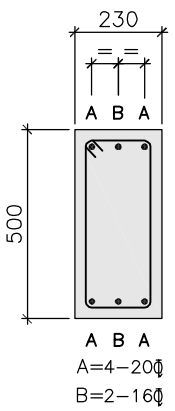

DETAIL OF SB-01

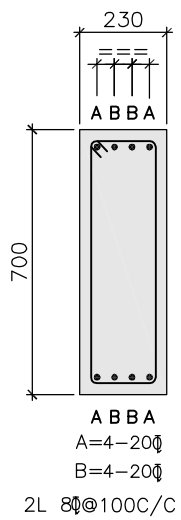

DETAIL OF SB-02

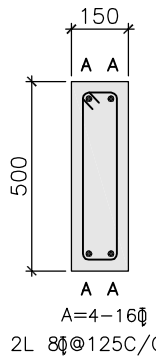

DETAIL OF SB-03

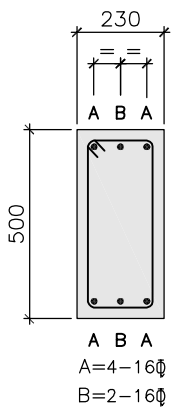

DETAIL OF SB-04

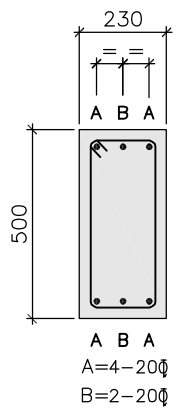

DETAIL OF SB-05

NOTES:

1. ALL DIMENSIONS AND LEVELS ARE IN mm U.N.O.
2. ONLY FIGURED DIMENSIONS ARE TO BE FOLLOWED, NOT TO BE MEASURED.
3. GRADE OF CONCRETE SHALL BE OF M25(1:1:2) U.N.O.
4. GRADE OF REINFORCEMENT STEEL SHALL BE OF Fe500
5. THESE DRAWINGS ARE THE PROPERTY OF M/S TATA CONSULTING ENGINEERS LIMITED. THOSE SHALL NOT BE COPIED, TRANSFERRED, MODIFIED OR USED FOR ANY PURPOSE OTHER THAN FOR THE PLANNING AND CONSTRUCTION OF "INTEGRATED COMMAND CONTROL CENTRE PROJECT AT PANJABARI, GUWAHATI"
6. DE-SHUTTERING PERIOD SHALL NOT BE LESS THAN SPECIFIED BELOW:-
   a) VERTICAL FACES OF COLUMN, BEAM & WALL : 24 HOURS
   b) SLAB (i) SPANNING UPTO 4.5m : 7 DAYS
      (ii) SPANNING OVER 4.5m : 14 DAYS
   c) BEAM (i) SPANNING UPTO 6.0m : 14 DAYS
      (ii) SPANNING OVER 6.0m : 21 DAYS
8. CLEAR COVER TO THE MAIN REINFORCEMENT
   a) FOUNDATION : 60mm
   b) COLUMN UPTO PLINTH : 60mm
   c) COLUMN ABOVE PLINTH : 40mm
   d) BEAM : 25mm
   e) WALL : 30mm
   f) SLAB : 15-20mm
9. LAP & ANCHORAGE SHALL BE OF 50 TIMES OF BAR DIA.
10. NOT MORE THAN 50% OF THE BARS SHALL BE SPLICED AT ONE SECTION
11. USE SPACE BAR TO AVOID CONGESTION, WHEREVER NECESSARY.
12. ANY DISCREPANCY NOTED SHOULD BE BROUGHT TO THE NOTICE OF THE CONSULTANT.
13. THIS DRAWING SHALL BE READ IN CONJUNCTION WITH RELEVANT ARCHITECTURAL DRAWINGS.
14. BEAMS MARKED AS * SHALL BE PLACED AT LANDING LEVEL

TENDER PURPOSE ONLY

SIGN.													
INITIALS													
REVISIONS													
SIGN.													17.04.2020
INITIALS													
ISSUE	DRN	DSN	CHD	CV	EL	IC	ME	PL	HVAC	EXT	LS	PE/PM	APPD	DATE
				CLEARED									

GUWAHATI SMART CITY DEVELOPMENT AGENCY LTD.
SMART CITY MISSION GUWAHATI

DETAILS OF SECOND FLOOR BEAM
L SECTION (SHEET 2 / 2)

TATA CONSULTING ENGINEERS LIMITED
MUMBAI

SCALE : AS NOTED
DC & DISC : ---
DWG NO. TCE.10477A-CV-1007-RC-1015
ISSUE R0

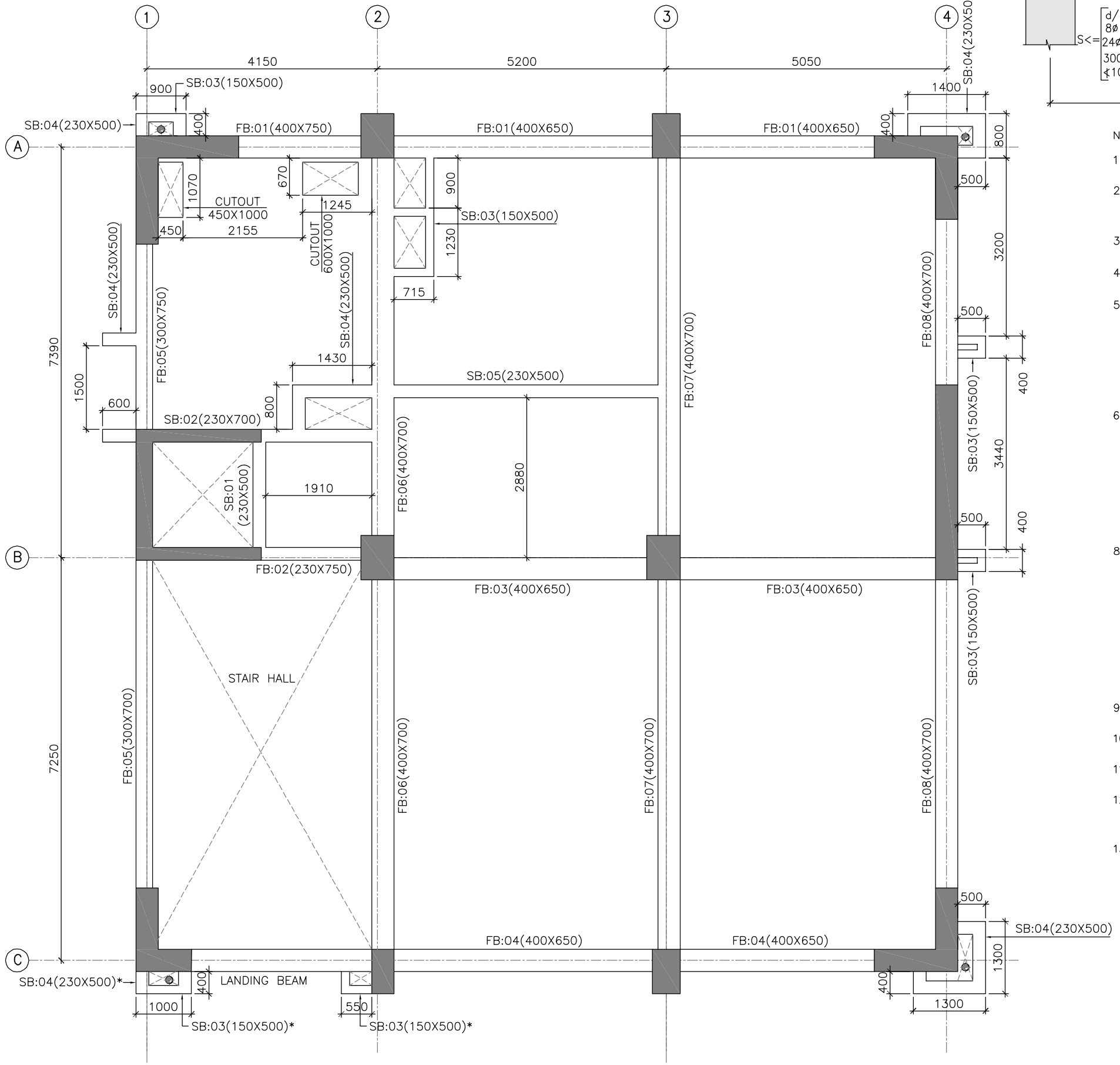

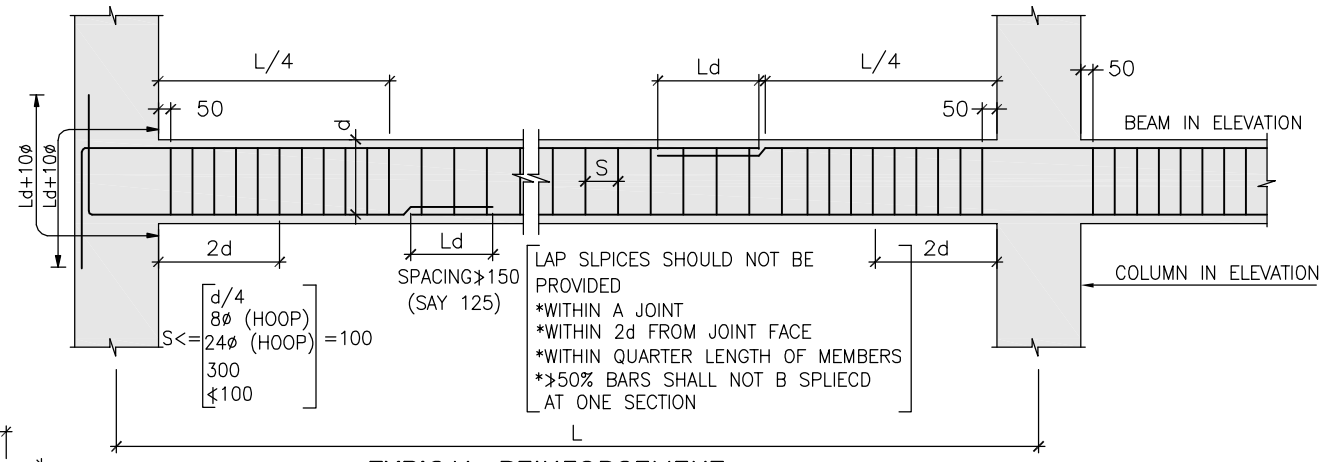

TYPICAL REINFORCEMENT DETAIL OF BEAM

NOTES:

1. ALL DIMENSIONS AND LEVELS ARE IN mm U.N.O.
2. ONLY FIGURED DIMENSIONS ARE TO BE FOLLOWED, NOT TO BE MEASURED.
3. GRADE OF CONCRETE SHALL BE OF M25(1:1:2) U.N.O.
4. GRADE OF REINFORCEMENT STEEL SHALL BE OF Fe500
5. THESE DRAWINGS ARE THE PROPERTY OF M/S TATA CONSULTING ENGINEERS LIMITED. THOSE SHALL NOT BE COPIED, TRANSFERRED, MODIFIED OR USED FOR ANY PURPOSE OTHER THAN FOR THE PLANNING AND CONSTRUCTION OF "INTEGRATED COMMAND CONTROL CENTRE PROJECT AT PANJABARI, GUWAHATI"
6. DE-SHUTTERING PERIOD SHALL NOT BE LESS THAN SPECIFIED BELOW:-
   a) VERTICAL FACES OF COLUMN, BEAM & WALL : 24 HOURS
   b) SLAB (i) SPANNING UPTO 4.5m : 7 DAYS
      (ii) SPANNING OVER 4.5m : 14 DAYS
   c) BEAM (i) SPANNING UPTO 6.0m : 14 DAYS
      (ii) SPANNING OVER 6.0m : 21 DAYS
8. CLEAR COVER TO THE MAIN REINFORCEMENT
   a) FOUNDATION : 60mm
   b) COLUMN UPTO PLINTH : 60mm
   c) COLUMN ABOVE PLINTH : 40mm
   d) BEAM : 25mm
   e) WALL : 30mm
   f) SLAB : 15-20mm
9. LAP & ANCHORAGE SHALL BE OF 50 TIMES OF BAR DIA.
10. NOT MORE THAN 50% OF THE BARS SHALL BE SPLICED AT ONE SECTION
11. USE SPACE BAR TO AVOID CONGESTION, WHEREVER NECESSARY.
12. ANY DISCREPANCY NOTED SHOULD BE BROUGHT TO THE NOTICE OF THE CONSULTANT.
13. THIS DRAWING SHALL BE READ IN CONJUNCTION WITH RELEVANT ARCHITECTURAL DRAWINGS.

TENDER PURPOSE ONLY

BEAMS MARKED AS * SHALL BE PLACED AT LANDING LEVEL

RELATED DRAWINGS:

1. TCE.10477A-CV-1007-RC-1001
2. TCE.10477A-CV-1007-RC-1017
3. TCE.10477A-CV-1007-RC-1026

SIGN.														
INITIALS														
REVISIONS														
SIGN.														17.04.2020
INITIALS														
ISSUE	DRN	DSN	CHD	CV	EL	IC	ME	PL	HVAC	EXT	LS	PE/PM	APPD	DATE
				CLEARED										

GUWAHATI SMART CITY DEVELOPMENT AGENCY LTD.

SMART CITY MISSION GUWAHATI

DETAILS OF THIRD FLOOR BEAM
BEAM LAYOUT (SHEET 1 / 2)

TATA CONSULTING ENGINEERS LIMITED
MUMBAI

SCALE : AS NOTED
DC & DISC: ---
DWG NO. TCE.10477A-CV-1007-RC-1016
ISSUE R0

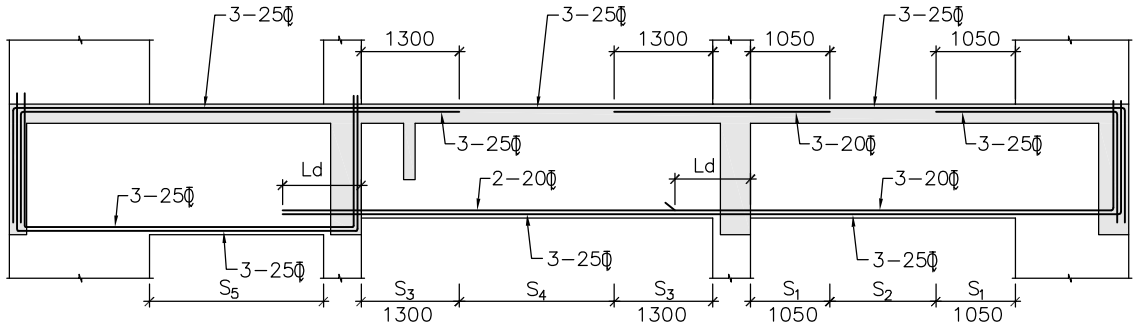

FB:01(400X750) FB:01(400X650) FB:01(400X650)

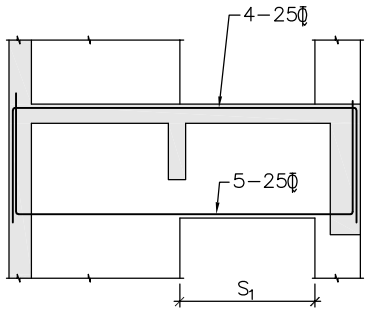

FB:02(230X750)

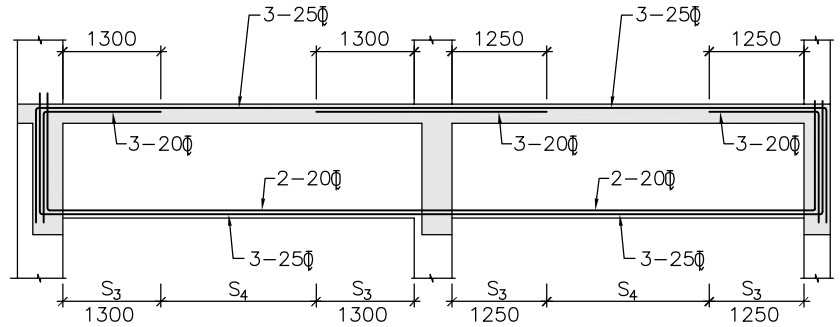

FB:03(400X650)

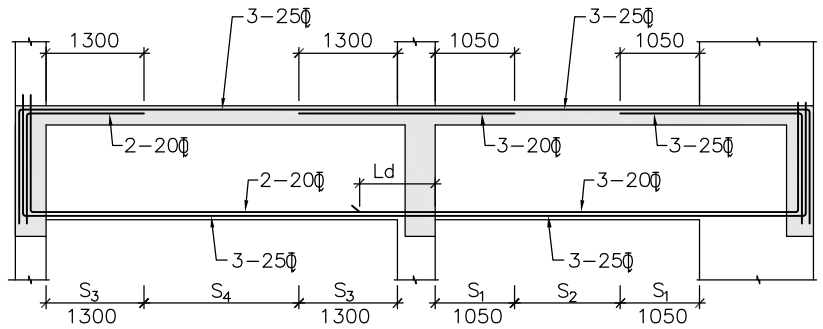

FB:04(400X650)

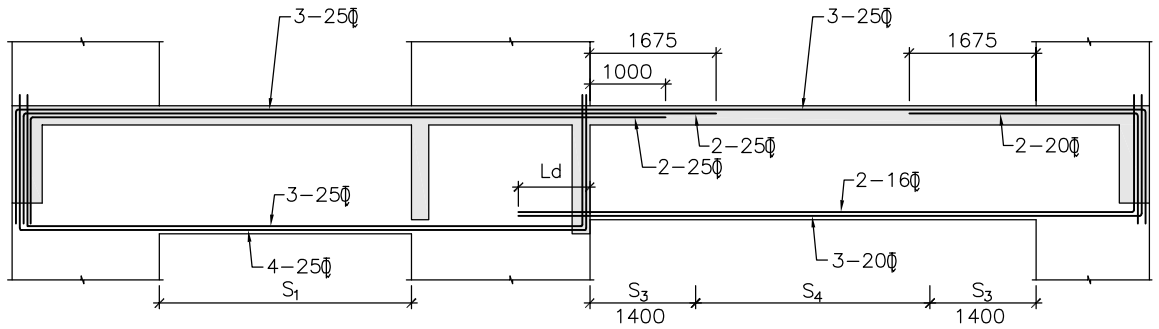

FB:05(300X750) FB:05(300X700)

RELATED DRAWINGS:

1. TCE.10477A-CV-1007-RC-1001
2. TCE.10477A-CV-1007-RC-1016
3. TCE.10477A-CV-1007-RC-1026

LEGEND:

S_1=2L 10Φ@100C/C STP.
S_2=2L 10Φ@150C/C STP.
S_3=2L 8Φ@100C/C STP.
S_4=2L 8Φ@150C/C STP.
S_5=4L 10Φ@100C/C STP.
S_6=4L 10Φ@150C/C STP.

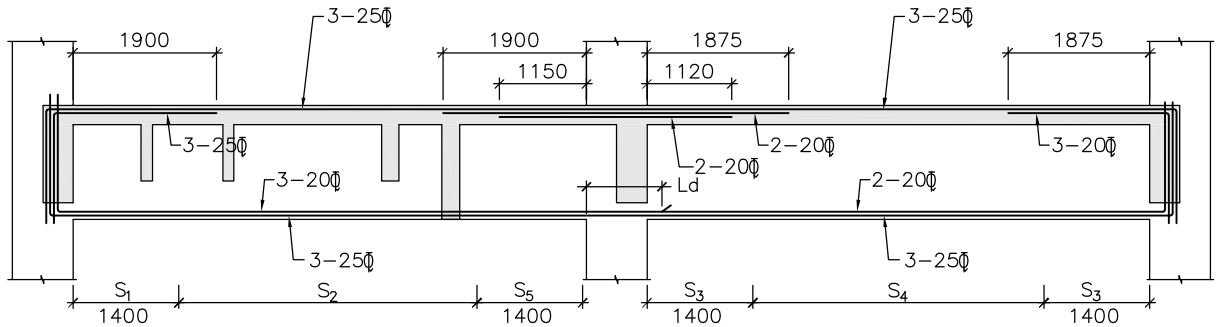

FB:06(400X700)

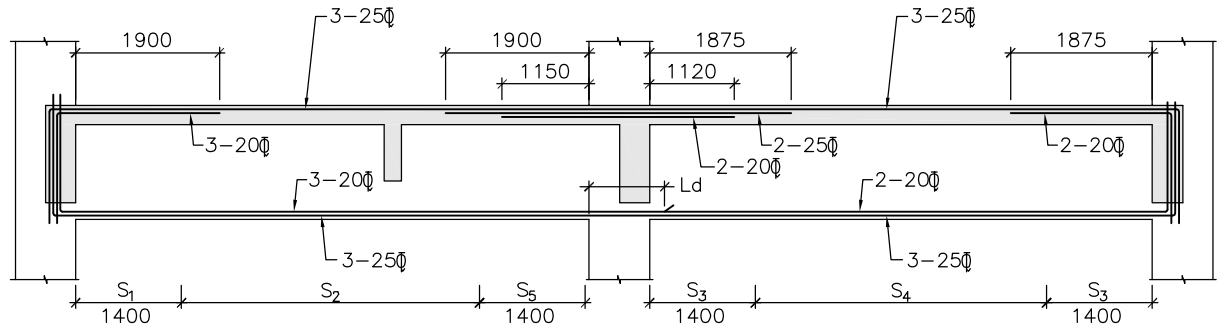

FB:07(400X700)

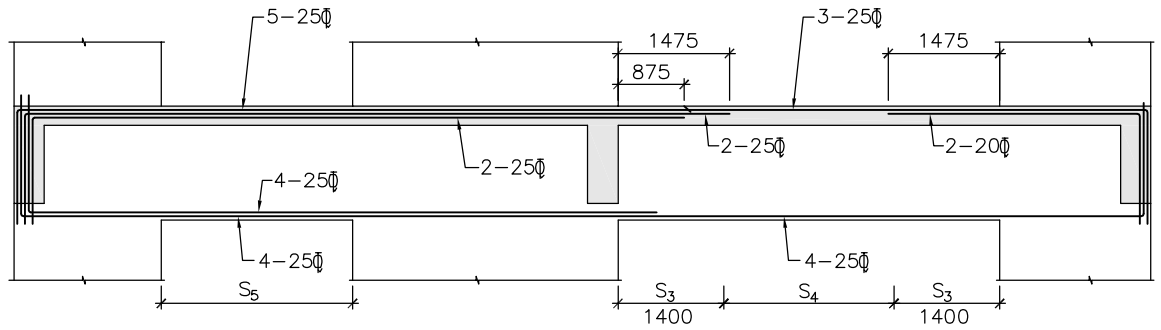

FB:08(400X700)

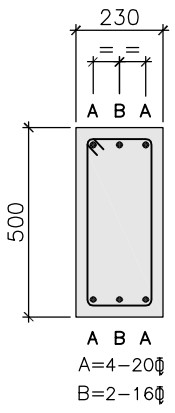

2L 8Φ@100C/C STP.

DETAIL OF SB-01

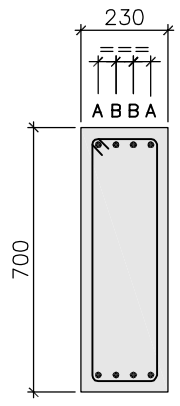

2L 8Φ@100C/C STP.

DETAIL OF SB-02

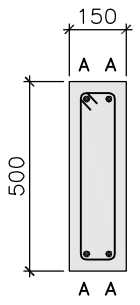

2L 8Φ@125C/C STP.

DETAIL OF SB-03

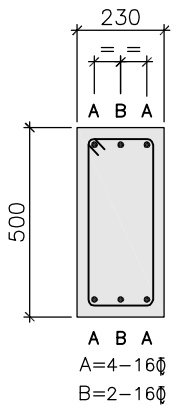

2L 8Φ@100C/C STP.

DETAIL OF SB-04

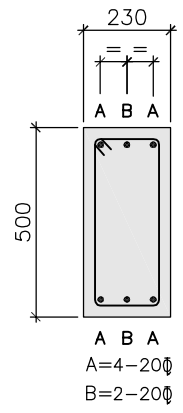

2L 8Φ@100C/C STP.

DETAIL OF SB-05

NOTES:

1. ALL DIMENSIONS AND LEVELS ARE IN mm U.N.O.
2. ONLY FIGURED DIMENSIONS ARE TO BE FOLLOWED, NOT TO BE MEASURED.
3. GRADE OF CONCRETE SHALL BE OF M25(1:1:2) U.N.O.
4. GRADE OF REINFORCEMENT STEEL SHALL BE OF Fe500
5. THESE DRAWINGS ARE THE PROPERTY OF M/S TATA CONSULTING ENGINEERS LIMITED. THOSE SHALL NOT BE COPIED, TRANSFERRED, MODIFIED OR USED FOR ANY PURPOSE OTHER THAN FOR THE PLANNING AND CONSTRUCTION OF "INTEGRATED COMMAND CONTROL CENTRE PROJECT AT PANJABARI, GUWAHATI"
6. DE-SHUTTERING PERIOD SHALL NOT BE LESS THAN SPECIFIED BELOW:-

a)	VERTICAL FACES OF COLUMN, BEAM & WALL		:	24 HOURS
b)	SLAB	(i) SPANNING UPTO 4.5m	:	7 DAYS
		(ii) SPANNING OVER 4.5m	:	14 DAYS
c)	BEAM	(i) SPANNING UPTO 6.0m	:	14 DAYS
		(ii) SPANNING OVER 6.0m	:	21 DAYS

8. CLEAR COVER TO THE MAIN REINFORCEMENT

a)	FOUNDATION	:	60mm
b)	COLUMN UPTO PLINTH	:	60mm
c)	COLUMN ABOVE PLINTH	:	40mm
d)	BEAM	:	25mm
e)	WALL	:	30mm
f)	SLAB	:	15-20mm

9. LAP & ANCHORAGE SHALL BE OF 50 TIMES OF BAR DIA.
10. NOT MORE THAN 50% OF THE BARS SHALL BE SPLICED AT ONE SECTION
11. USE SPACE BAR TO AVOID CONGESTION, WHEREVER NECESSARY.
12. ANY DISCREPANCY NOTED SHOULD BE BROUGHT TO THE NOTICE OF THE CONSULTANT.
13. THIS DRAWING SHALL BE READ IN CONJUNCTION WITH RELEVANT ARCHITECTURAL DRAWINGS.
14. BEAMS MARKED AS * SHALL BE PLACED AT LANDING LEVEL

TENDER PURPOSE ONLY

SIGN.													
INITIALS													
REVISIONS													
SIGN.													17.04.2020
INITIALS													
ISSUE	DRN	DSN	CHD	CV	EL	IC	ME	PL	HVAC	EXT	LS	PE/PM	APPD	DATE
				CLEARED									

GUWAHATI SMART CITY DEVELOPMENT AGENCY LTD.

SMART CITY MISSION GUWAHATI

DETAILS OF THIRD FLOOR BEAM
L SECTION (SHEET 2 / 2)

TATA CONSULTING ENGINEERS LIMITED
MUMBAI

SCALE : AS NOTED
DC & DISC : ---
DWG NO. TCE.10477A-CV-1007-RC-1017
ISSUE R0