SECTION MARK	SECTIONAL DETAIL	TIE AT ZONE–01	TIE AT ZONE–02
SEC.–07	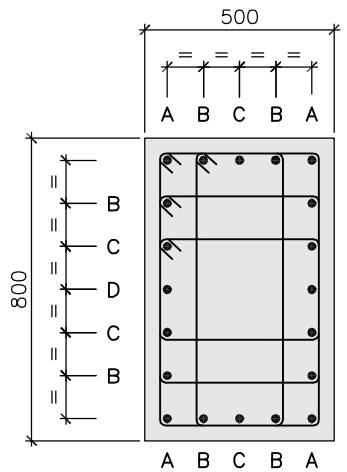 A=4–25ϕ B=8–25ϕ C=6–25ϕ D=2–25ϕ	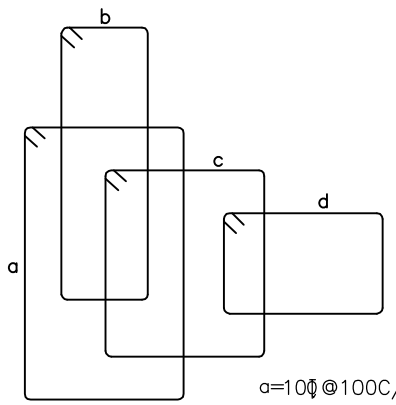 a=10ϕ@100C/C b=8ϕ@200C/C c=8ϕ@200C/C d=8ϕ@500C/C	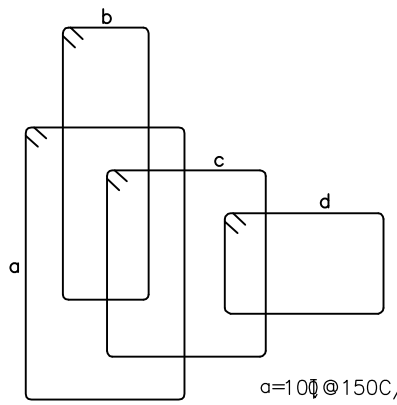 a=10ϕ@150C/C b=8ϕ@300C/C c=8ϕ@300C/C d=8ϕ@750C/C
SEC.–08	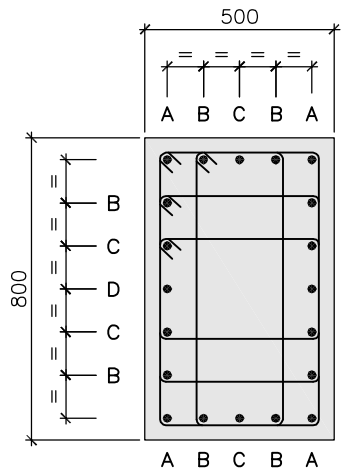 A=4–25ϕ B=8–25ϕ C=6–20ϕ D=2–20ϕ	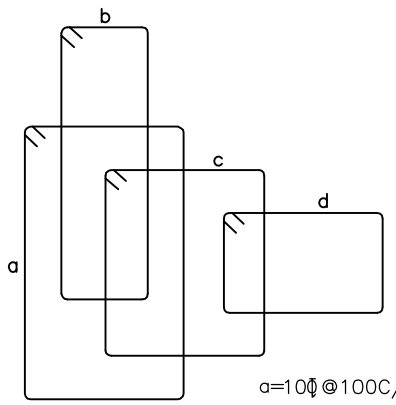 a=10ϕ@100C/C b=8ϕ@200C/C c=8ϕ@200C/C d=8ϕ@500C/C	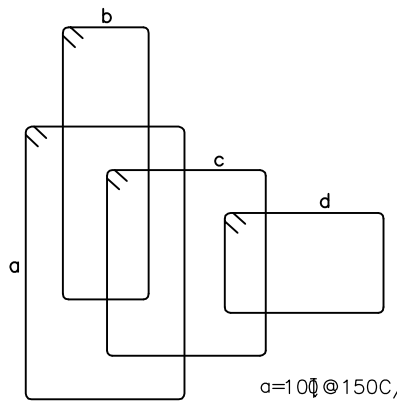 a=10ϕ@150C/C b=8ϕ@300C/C c=8ϕ@300C/C d=8ϕ@750C/C
SEC.–09	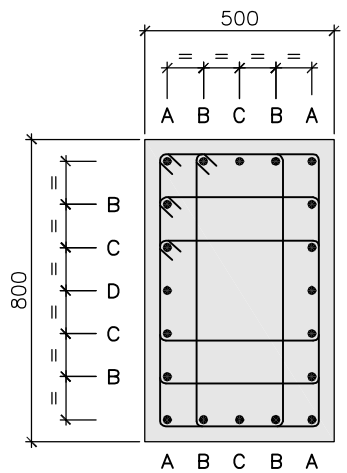 A=4–20ϕ B=8–16ϕ C=6–16ϕ D=2–16ϕ	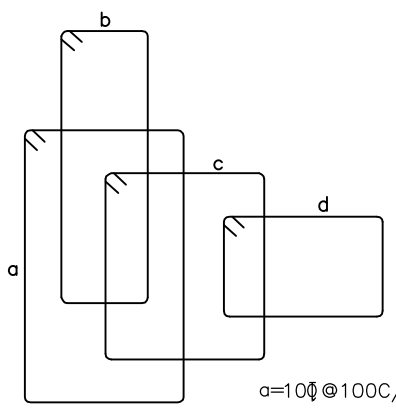 a=10ϕ@100C/C b=8ϕ@200C/C c=8ϕ@200C/C d=8ϕ@500C/C	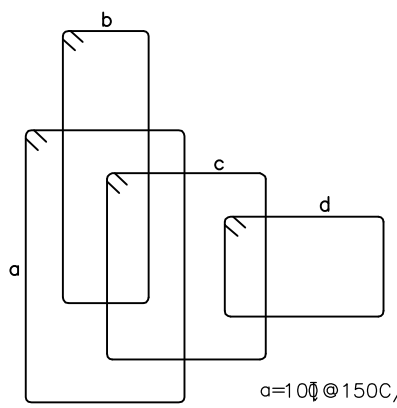 a=10ϕ@150C/C b=8ϕ@300C/C c=8ϕ@300C/C d=8ϕ@750C/C

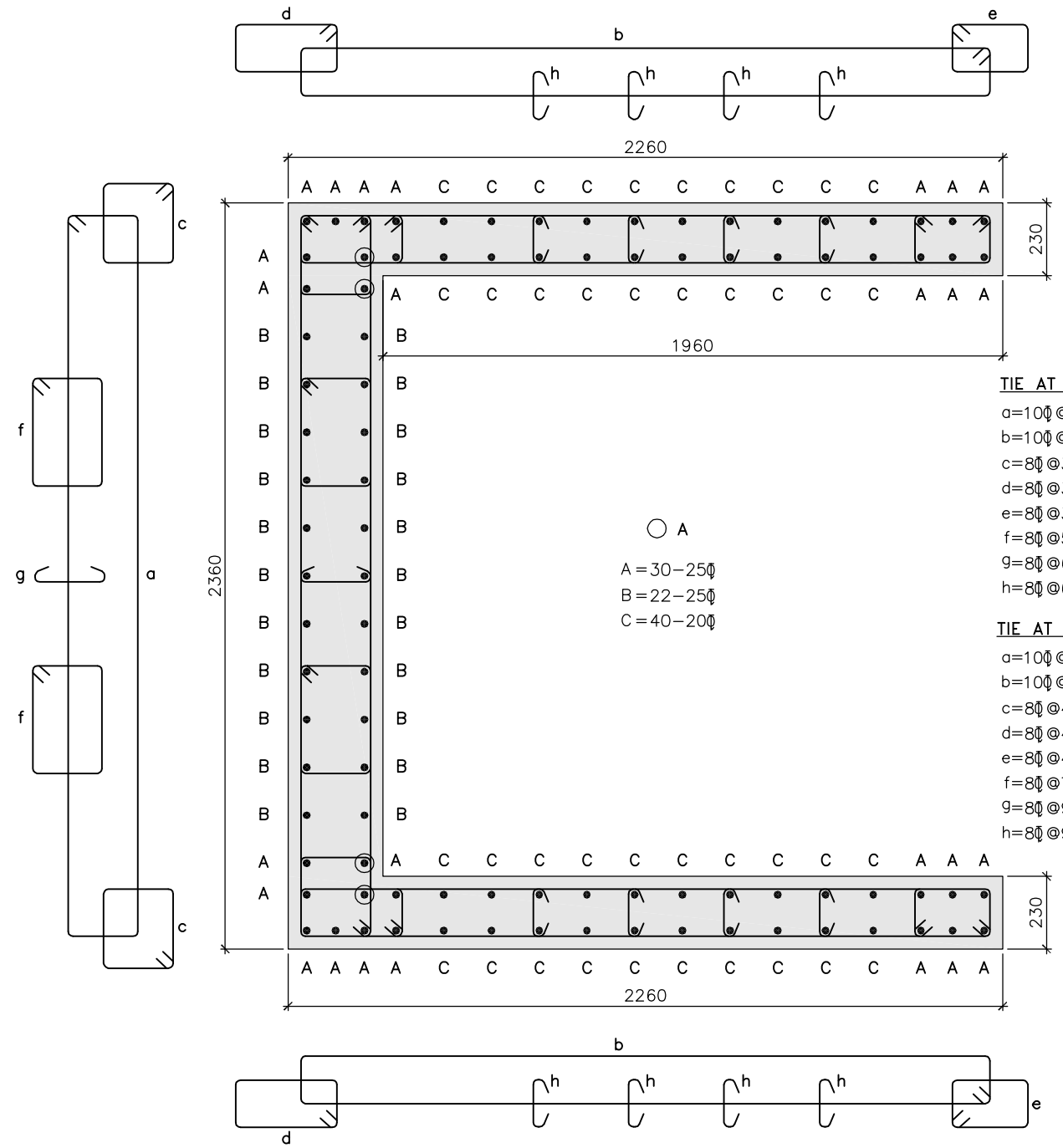

TIE AT ZONE–01

a=10ϕ@100C/C
b=10ϕ@100C/C
c=8ϕ@300C/C
d=8ϕ@300C/C
e=8ϕ@300C/C
f=8ϕ@500C/C
g=8ϕ@600C/C
h=8ϕ@600C/C

TIE AT ZONE–02

a=10ϕ@150C/C
b=10ϕ@150C/C
c=8ϕ@450C/C
d=8ϕ@450C/C
e=8ϕ@450C/C
f=8ϕ@750C/C
g=8ϕ@900C/C
h=8ϕ@900C/C

RELATED DRAWINGS:

1. TCE.10477A–CV–1007–RC–1001
2. TCE.10477A–CV–1007–RC–1002
3. TCE.10477A–CV–1007–RC–1003
4. TCE.10477A–CV–1007–RC–1004
5. TCE.10477A–CV–1007–RC–1005
6. TCE.10477A–CV–1007–RC–1006
7. TCE.10477A–CV–1007–RC–1007
8. TCE.10477A–CV–1007–RC–1008

NOTES:

1. ALL DIMENSIONS AND LEVELS ARE IN mm U.N.O.
2. ONLY FIGURED DIMENSIONS ARE TO BE FOLLOWED, NOT TO BE MEASURED.
3. GRADE OF CONCRETE SHALL BE OF M25(1:1:2) U.N.O.
4. GRADE OF REINFORCEMENT STEEL SHALL BE OF Fe500
5. LAP & ANCHORAGE SHALL BE OF 50 TIMES OF BAR DIA.
6. NOT MORE THAN 50% OF THE BARS SHALL BE SPLICED AT ONE SECTION
7. USE SPACE BAR TO AVOID CONGESTION, WHEREVER NECESSARY.
8. ANY DISCREPANCY NOTED SHOULD BE BROUGHT TO THE NOTICE OF THE CONSULTANT.
9. THIS DRAWING SHALL BE READ IN CONJUNCTION WITH RELEVANT ARCHITECTURAL DRAWINGS.

TENDER PURPOSE ONLY

SIGN.													
INITIALS													
REVISIONS													
SIGN.													15.04.2020
INITIALS													
ISSUE	DRN	DSN	CHD	CV	EL	IC	ME	PL	HVAC	EXT	LS	PE/PM	APPD	DATE
				CLEARED									

GUWAHATI SMART CITY LIMITED
SMART CITY MISSION GUWAHATI

DETAILS OF COLUMN
SECTIONAL DETAIL (SHEET 9 / 9)

TATA CONSULTING ENGINEERS LIMITED
MUMBAI

SCALE : N.T.S.
DC & DISC : ———
DWG NO. TCE.10477A–CV–1007–RC–1009
ISSUE R0

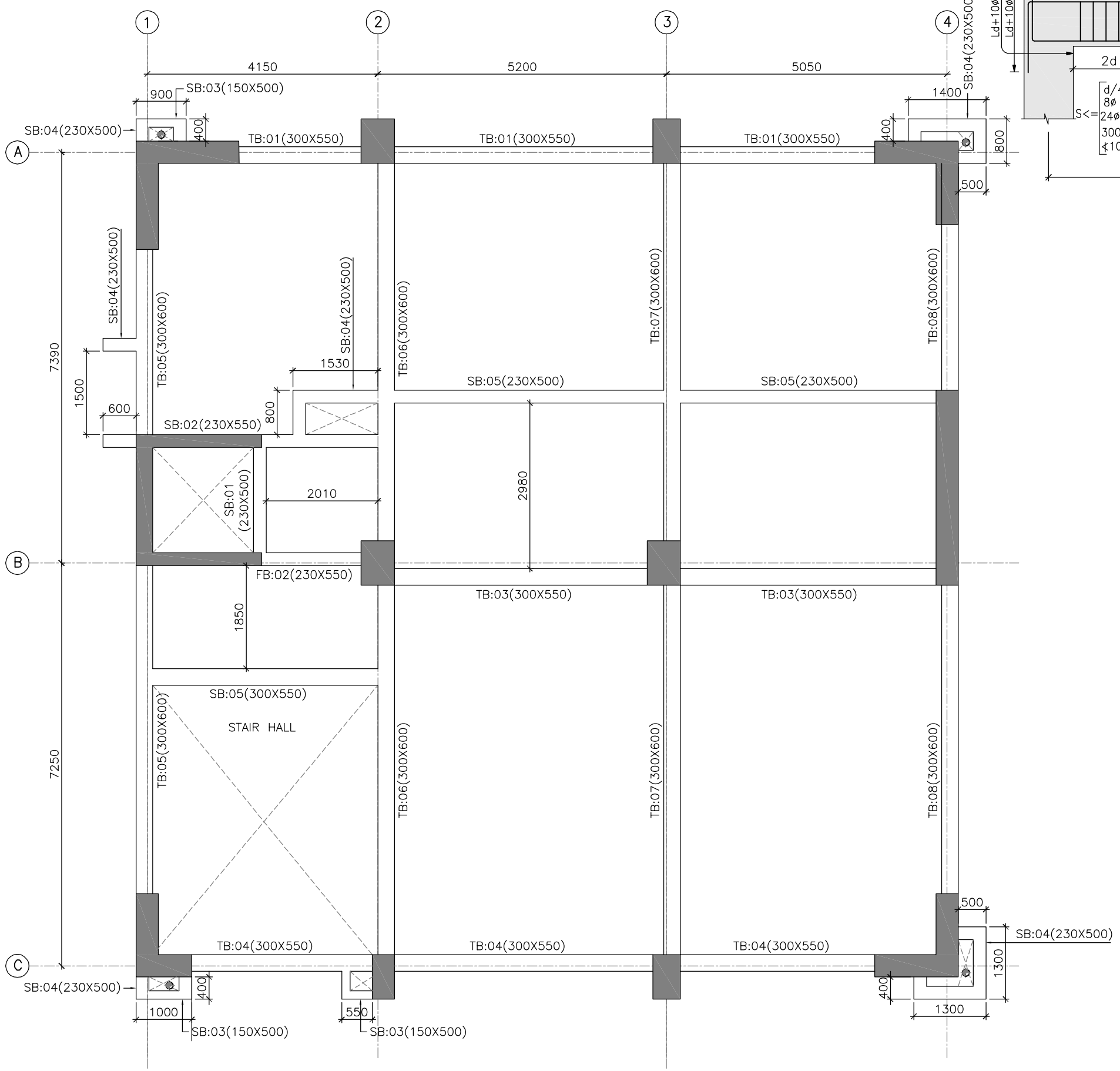

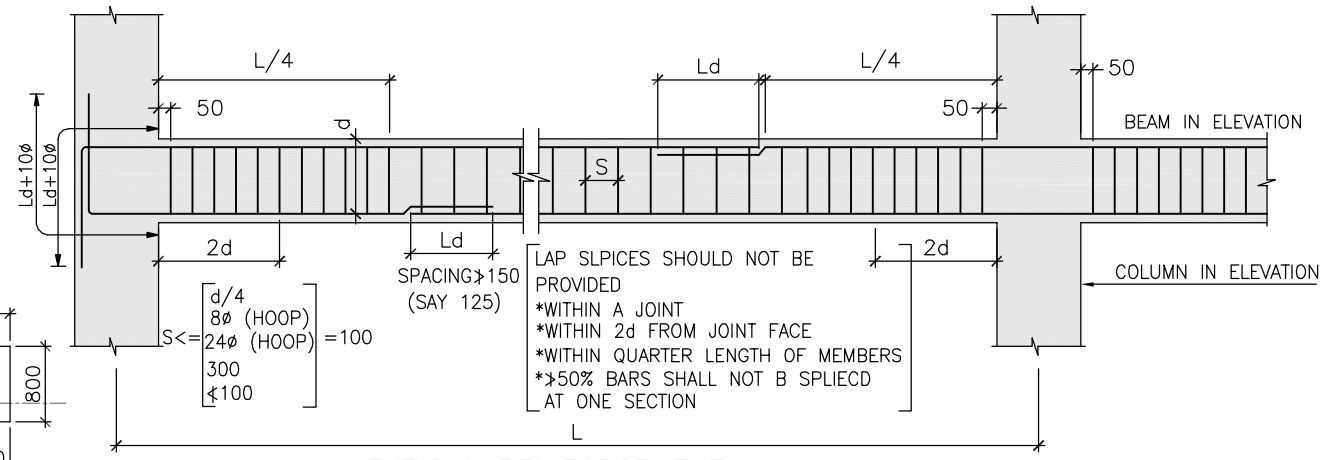

TYPICAL REINFORCEMENT DETAIL OF BEAM

NOTES:

1. ALL DIMENSIONS AND LEVELS ARE IN mm U.N.O.
2. ONLY FIGURED DIMENSIONS ARE TO BE FOLLOWED, NOT TO BE MEASURED.
3. GRADE OF CONCRETE SHALL BE OF M25(1:1:2) U.N.O.
4. GRADE OF REINFORCEMENT STEEL SHALL BE OF Fe500
5. THESE DRAWINGS ARE THE PROPERTY OF M/S TATA CONSULTING ENGINEERS LIMITED. THOSE SHALL NOT BE COPIED, TRANSFERRED, MODIFIED OR USED FOR ANY PURPOSE OTHER THAN FOR THE PLANNING AND CONSTRUCTION OF "INTEGRATED COMMAND CONTROL CENTRE PROJECT AT PANJABARI, GUWAHATI"
6. DE-SHUTTERING PERIOD SHALL NOT BE LESS THAN SPECIFIED BELOW:-
   - a) VERTICAL FACES OF COLUMN, BEAM & WALL : 24 HOURS
   - b) SLAB (i) SPANNING UPTO 4.5m : 7 DAYS
   - (ii) SPANNING OVER 4.5m : 14 DAYS
   - c) BEAM (i) SPANNING UPTO 6.0m : 14 DAYS
   - (ii) SPANNING OVER 6.0m : 21 DAYS
8. CLEAR COVER TO THE MAIN REINFORCEMENT
   - a) FOUNDATION : 60mm
   - b) COLUMN UPTO PLINTH : 60mm
   - c) COLUMN ABOVE PLINTH : 40mm
   - d) BEAM : 25mm
   - e) WALL : 30mm
   - f) SLAB : 15-20mm
9. LAP & ANCHORAGE SHALL BE OF 50 TIMES OF BAR DIA.
10. NOT MORE THAN 50% OF THE BARS SHALL BE SPLICED AT ONE SECTION
11. USE SPACE BAR TO AVOID CONGESTION, WHEREVER NECESSARY.
12. ANY DISCREPANCY NOTED SHOULD BE BROUGHT TO THE NOTICE OF THE CONSULTANT.
13. THIS DRAWING SHALL BE READ IN CONJUNCTION WITH RELEVANT ARCHITECTURAL DRAWINGS.

RELATED DRAWINGS:

1. TCE.10477A-CV-1007-RC-1001
2. TCE.10477A-CV-1007-RC-1011

TENDER PURPOSE ONLY

SIGN.													
INITIALS													
REVISIONS													
SIGN.													17.04.2020
INITIALS													
ISSUE	DRN	DSN	CHD	CV	EL	IC	ME	PL	HVAC	EXT	LS	PE/PM	APPD	DATE
				CLEARED									

GUWAHATI SMART CITY LIMITED
SMART CITY MISSION GUWAHATI

DETAILS OF TIE BEAM
BEAM LAYOUT (SHEET 1 / 2)

TATA CONSULTING ENGINEERS LIMITED
MUMBAI

SCALE : AS NOTED
DC & DISC: ---
DWG NO. TCE.10477A-CV-1007-RC-1010
ISSUE R0

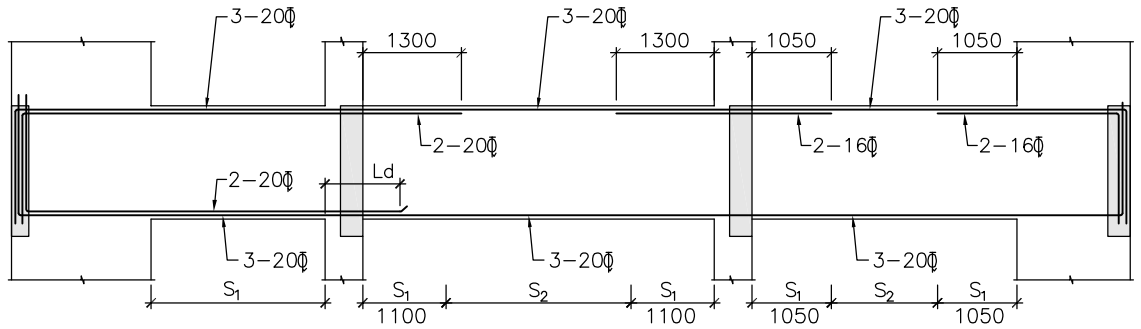

TB:01(300X550)

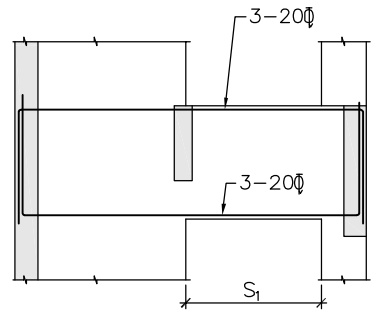

TB:02(230X550)

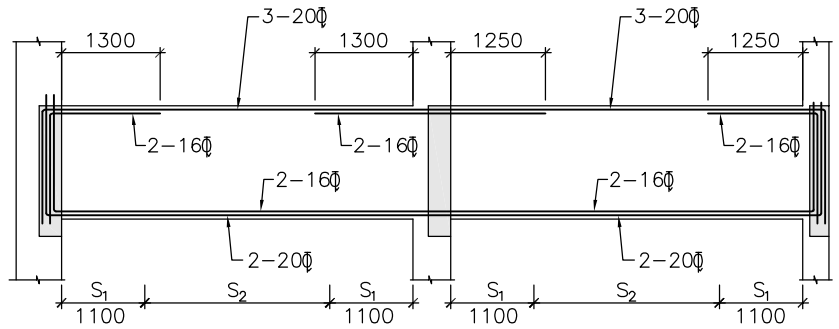

TB:03(300X550)

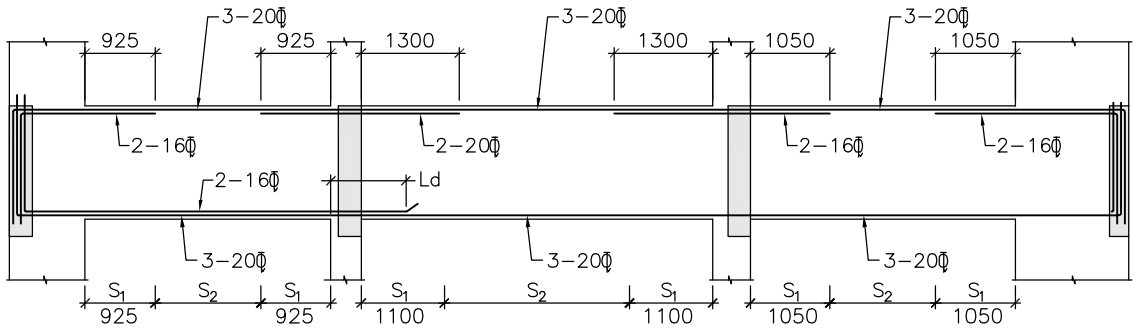

TB:04(300X550)

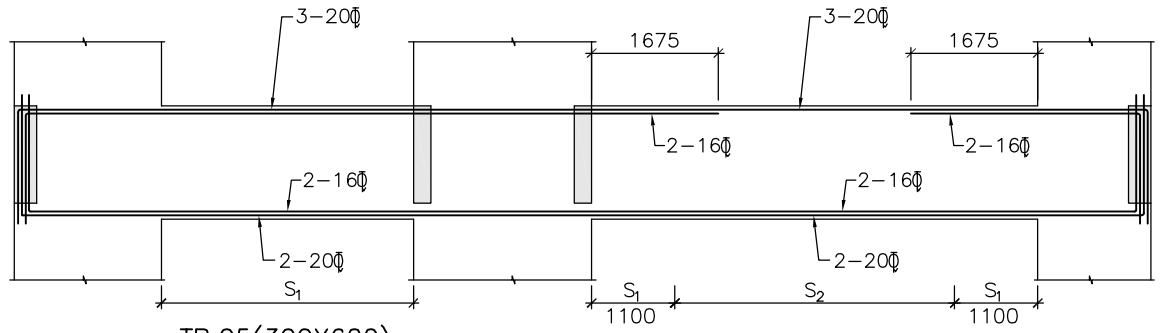

TB:05(300X600)

RELATED DRAWINGS:

1. TCE.10477A-CV-1007-RC-1001
2. TCE.10477A-CV-1007-RC-1010

LEGEND:

S_1=2L 8Φ@100C/C STP.
S_2=2L 8Φ@150C/C STP.

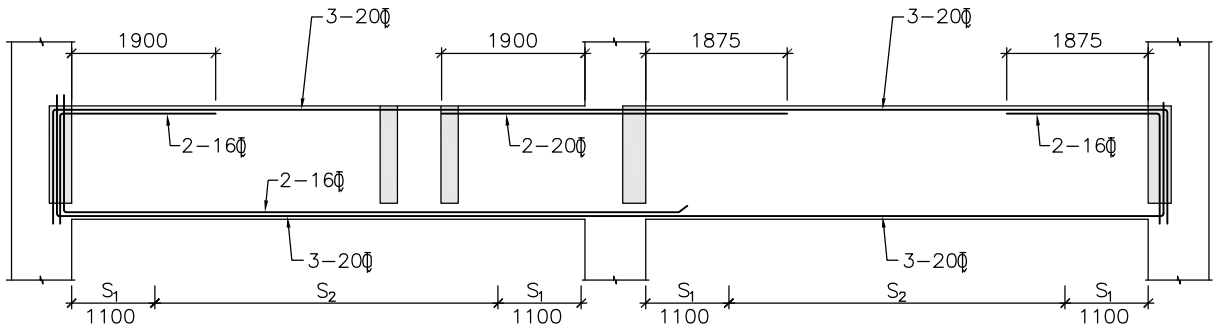

TB:06(300X600)

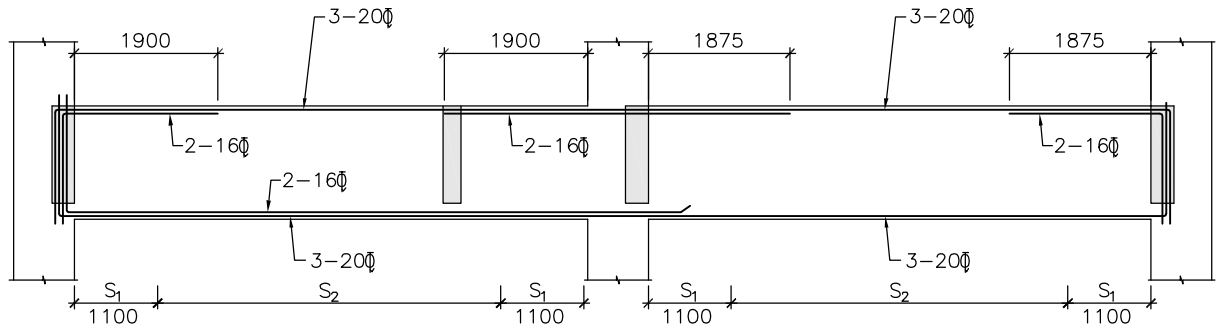

TB:07(300X600)

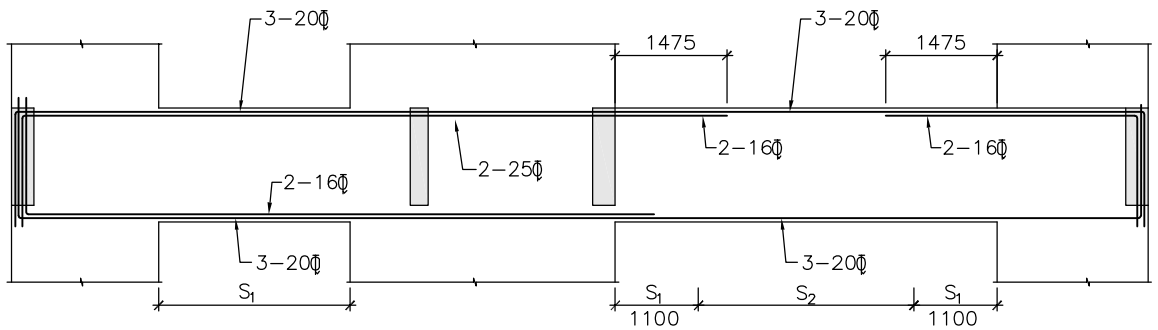

TB:08(300X600)

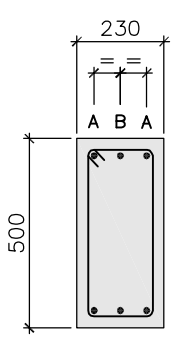

A=4-20Φ
B=2-16Φ
2L 8Φ@100C/C STP.

DETAIL OF SB-01

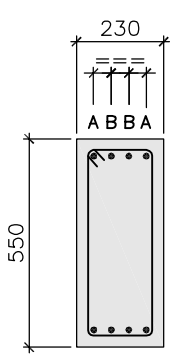

A=4-20Φ
B=4-20Φ
2L 8Φ@100C/C STP.

DETAIL OF SB-02

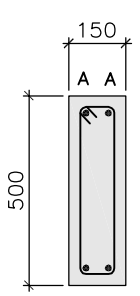

A=4-16Φ
2L 8Φ@125C/C STP.

DETAIL OF SB-03

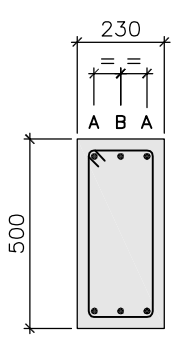

A=4-16Φ
B=2-16Φ
2L 8Φ@100C/C STP.

DETAIL OF SB-04

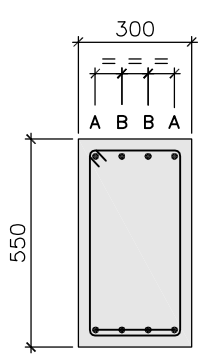

A=4-20Φ
B=4-20Φ
2L 8Φ@100C/C STP.

DETAIL OF SB-05

NOTES:

1. ALL DIMENSIONS AND LEVELS ARE IN mm U.N.O.
2. ONLY FIGURED DIMENSIONS ARE TO BE FOLLOWED, NOT TO BE MEASURED.
3. GRADE OF CONCRETE SHALL BE OF M25(1:1:2) U.N.O.
4. GRADE OF REINFORCEMENT STEEL SHALL BE OF Fe500
5. THESE DRAWINGS ARE THE PROPERTY OF M/S TATA CONSULTING ENGINEERS LIMITED. THOSE SHALL NOT BE COPIED, TRANSFERRED, MODIFIED OR USED FOR ANY PURPOSE OTHER THAN FOR THE PLANNING AND CONSTRUCTION OF "INTEGRATED COMMAND CONTROL CENTRE PROJECT AT PANJABARI, GUWAHATI"
6. DE-SHUTTERING PERIOD SHALL NOT BE LESS THAN SPECIFIED BELOW:-

a)	VERTICAL FACES OF COLUMN, BEAM & WALL		:	24 HOURS
b)	SLAB	(i) SPANNING UPTO 4.5m	:	7 DAYS
		(ii) SPANNING OVER 4.5m	:	14 DAYS
c)	BEAM	(i) SPANNING UPTO 6.0m	:	14 DAYS
		(ii) SPANNING OVER 6.0m	:	21 DAYS

8. CLEAR COVER TO THE MAIN REINFORCEMENT

a)	FOUNDATION	:	60mm
b)	COLUMN UPTO PLINTH	:	60mm
c)	COLUMN ABOVE PLINTH	:	40mm
d)	BEAM	:	25mm
e)	WALL	:	30mm
f)	SLAB	:	15-20mm

9. LAP & ANCHORAGE SHALL BE OF 50 TIMES OF BAR DIA.
10. NOT MORE THAN 50% OF THE BARS SHALL BE SPLICED AT ONE SECTION
11. USE SPACE BAR TO AVOID CONGESTION, WHEREVER NECESSARY.
12. ANY DISCREPANCY NOTED SHOULD BE BROUGHT TO THE NOTICE OF THE CONSULTANT.
13. THIS DRAWING SHALL BE READ IN CONJUNCTION WITH RELEVANT ARCHITECTURAL DRAWINGS.

TENDER PURPOSE ONLY

SIGN.														
INITIALS														
REVISIONS														
SIGN.														17.04.2020
INITIALS														
ISSUE	DRN	DSN	CHD	CV	EL	IC	ME	PL	HVAC	EXT	LS	PE/PM	APPD	DATE
				CLEARED										

GUWAHATI SMART CITY LIMITED
SMART CITY MISSION GUWAHATI

DETAILS OF TIE BEAM
L SECTION (SHEET 2 / 2)

TATA CONSULTING ENGINEERS LIMITED
MUMBAI

SCALE : AS NOTED
DC & DISC : ---
DWG NO. TCE.10477A-CV-1007-RC-1011
ISSUE R0

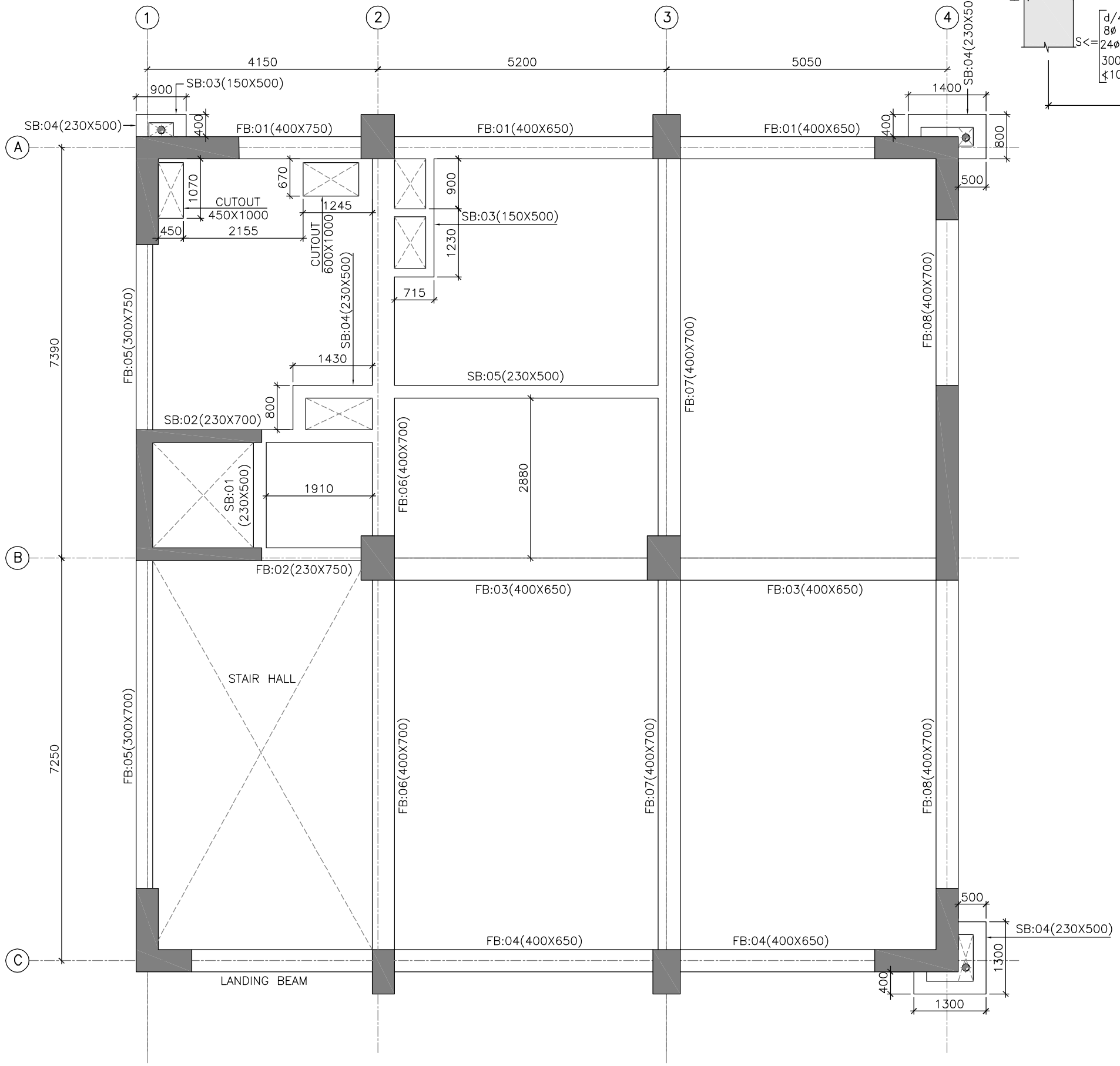

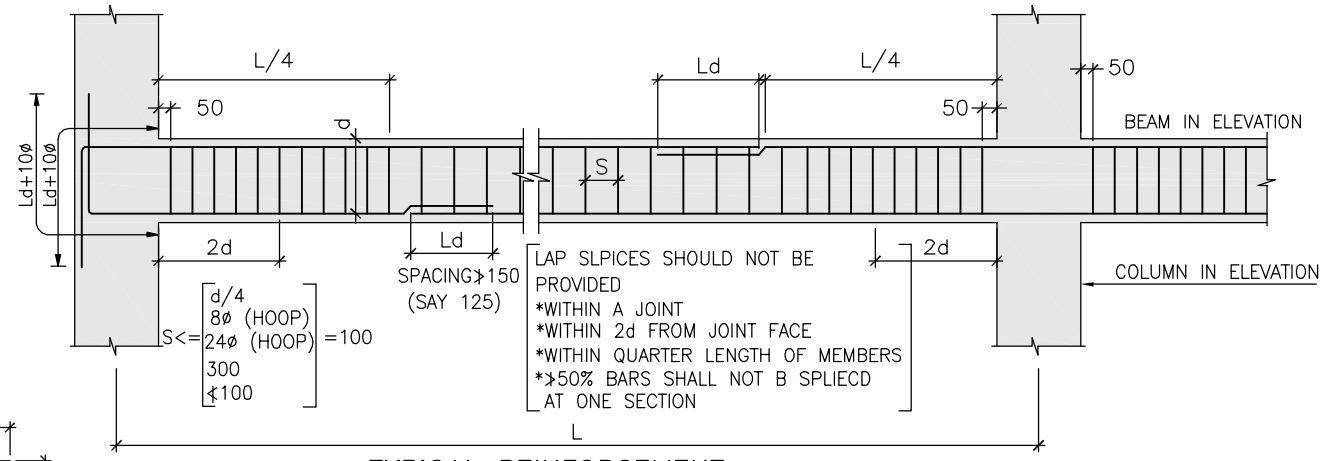

TYPICAL REINFORCEMENT DETAIL OF BEAM

NOTES:

1. ALL DIMENSIONS AND LEVELS ARE IN mm U.N.O.
2. ONLY FIGURED DIMENSIONS ARE TO BE FOLLOWED, NOT TO BE MEASURED.
3. GRADE OF CONCRETE SHALL BE OF M25(1:1:2) U.N.O.
4. GRADE OF REINFORCEMENT STEEL SHALL BE OF Fe500
5. THESE DRAWINGS ARE THE PROPERTY OF M/S TATA CONSULTING ENGINEERS LIMITED. THOSE SHALL NOT BE COPIED, TRANSFERRED, MODIFIED OR USED FOR ANY PURPOSE OTHER THAN FOR THE PLANNING AND CONSTRUCTION OF "INTEGRATED COMMAND CONTROL CENTRE PROJECT AT PANJABARI, GUWAHATI"
6. DE-SHUTTERING PERIOD SHALL NOT BE LESS THAN SPECIFIED BELOW:-
   a) VERTICAL FACES OF COLUMN, BEAM & WALL : 24 HOURS
   b) SLAB (i) SPANNING UPTO 4.5m : 7 DAYS
      (ii) SPANNING OVER 4.5m : 14 DAYS
   c) BEAM (i) SPANNING UPTO 6.0m : 14 DAYS
      (ii) SPANNING OVER 6.0m : 21 DAYS
8. CLEAR COVER TO THE MAIN REINFORCEMENT
   a) FOUNDATION : 60mm
   b) COLUMN UPTO PLINTH : 60mm
   c) COLUMN ABOVE PLINTH : 40mm
   d) BEAM : 25mm
   e) WALL : 30mm
   f) SLAB : 15-20mm
9. LAP & ANCHORAGE SHALL BE OF 50 TIMES OF BAR DIA.
10. NOT MORE THAN 50% OF THE BARS SHALL BE SPLICED AT ONE SECTION
11. USE SPACE BAR TO AVOID CONGESTION, WHEREVER NECESSARY.
12. ANY DISCREPANCY NOTED SHOULD BE BROUGHT TO THE NOTICE OF THE CONSULTANT.
13. THIS DRAWING SHALL BE READ IN CONJUNCTION WITH RELEVANT ARCHITECTURAL DRAWINGS.

RELATED DRAWINGS:

1. TCE.10477A-CV-1007-RC-1001
2. TCE.10477A-CV-1007-RC-1013
3. TCE.10477A-CV-1007-RC-1024

TENDER PURPOSE ONLY

SIGN.														
INITIALS														
REVISIONS														
SIGN.														17.04.2020
INITIALS														
ISSUE	DRN	DSN	CHD	CV	EL	IC	ME	PL	HVAC	EXT	LS	PE/PM	APPD	DATE
				CLEARED										

GUWAHATI SMART CITY LIMITED
SMART CITY MISSION GUWAHATI

DETAILS OF FIRST FLOOR BEAM
BEAM LAYOUT (SHEET 1 / 2)

TATA CONSULTING ENGINEERS LIMITED
MUMBAI

SCALE : AS NOTED
DC & DISC : ---
DWG NO. TCE.10477A-CV-1007-RC-1012
ISSUE R0

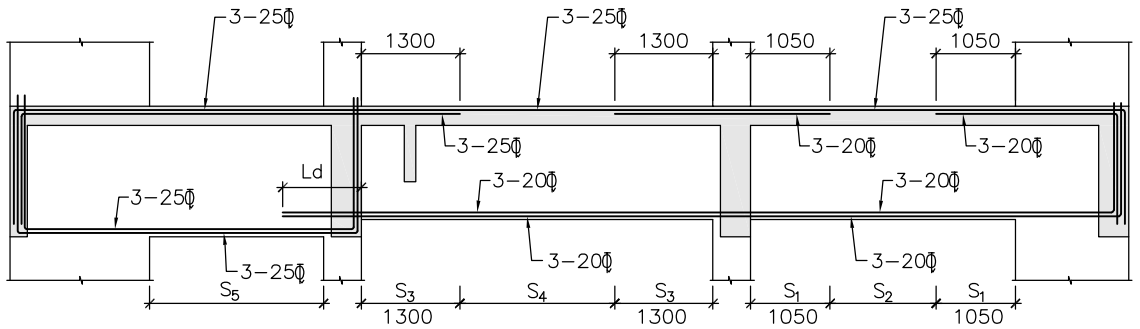

FB:01(400X750) FB:01(400X650) FB:01(400X650)

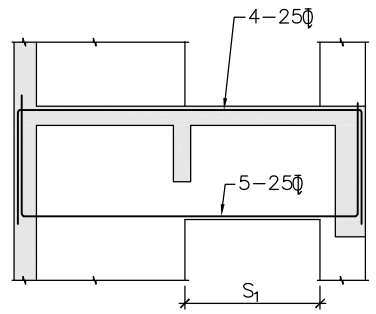

FB:02(230X750)

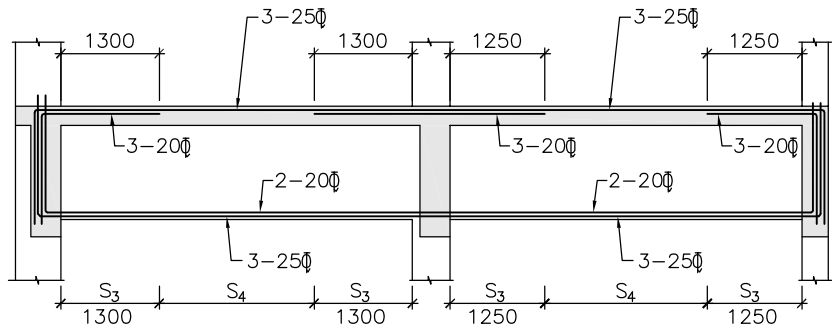

FB:03(400X650)

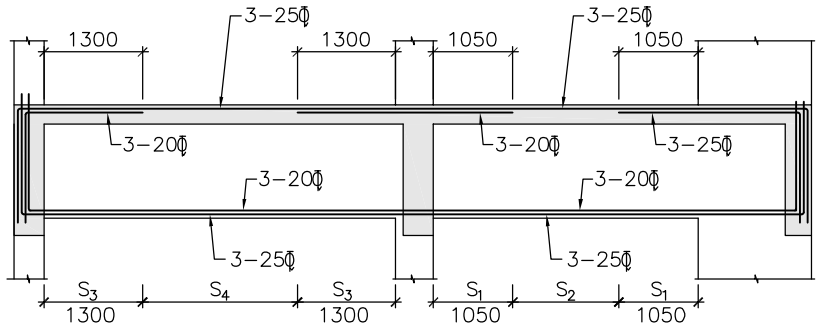

FB:04(400X650)

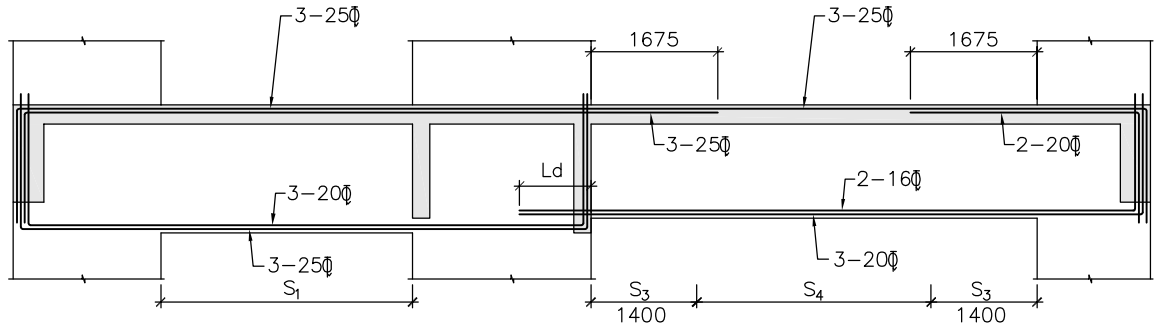

FB:05(300X750) FB:05(300X700)

RELATED DRAWINGS:

1. TCE.10477A-CV-1007-RC-1001
2. TCE.10477A-CV-1007-RC-1012
3. TCE.10477A-CV-1007-RC-1024

LEGEND:

S_1=2L 10Φ@100C/C STP.
S_2=2L 10Φ@150C/C STP.
S_3=2L 8Φ@100C/C STP.
S_4=2L 8Φ@150C/C STP.
S_5=4L 10Φ@100C/C STP.

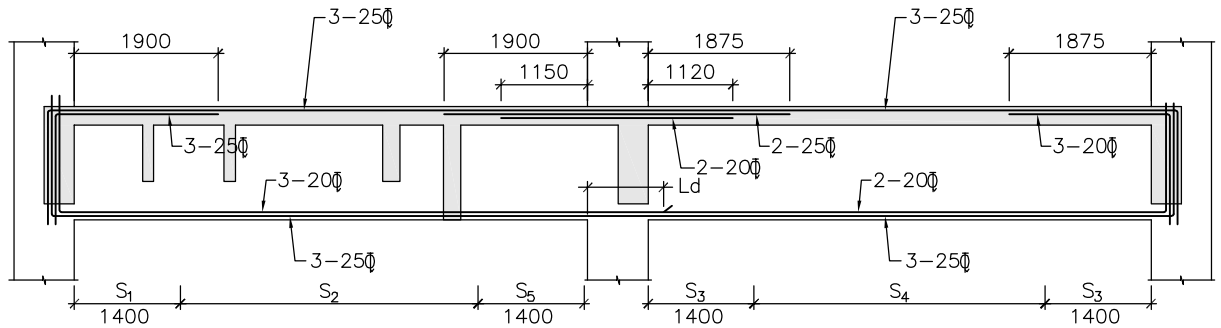

FB:06(400X700)

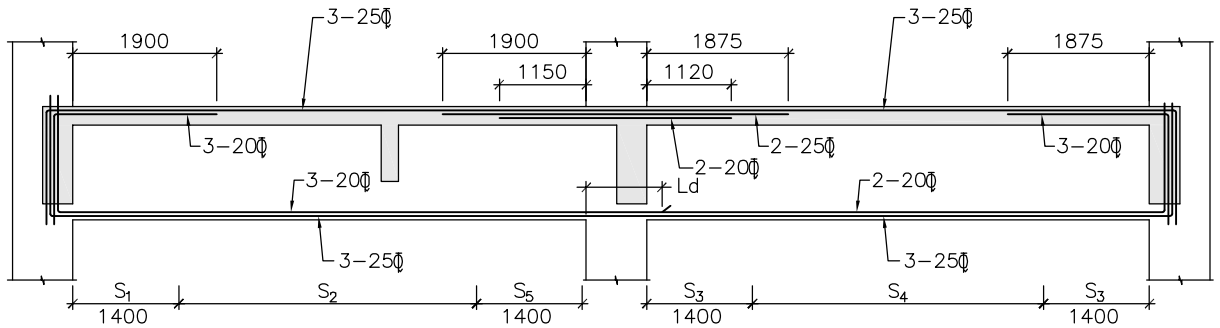

FB:07(400X700)

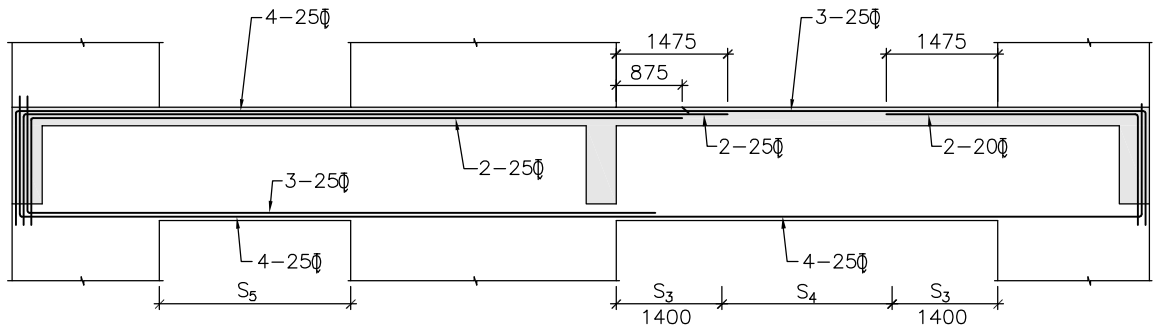

FB:08(400X700)

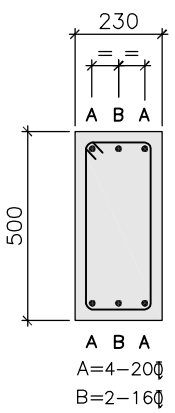

2L 8Φ@100C/C STP.

DETAIL OF SB-01

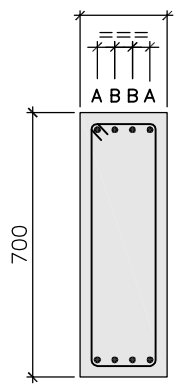

2L 8Φ@100C/C STP.

DETAIL OF SB-02

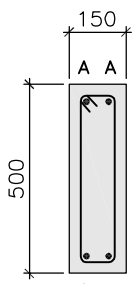

2L 8Φ@125C/C STP.

DETAIL OF SB-03

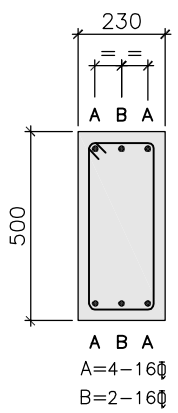

2L 8Φ@100C/C STP.

DETAIL OF SB-04

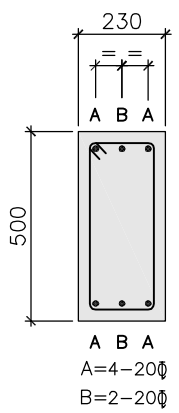

2L 8Φ@100C/C STP.

DETAIL OF SB-05

NOTES:

1. ALL DIMENSIONS AND LEVELS ARE IN mm U.N.O.
2. ONLY FIGURED DIMENSIONS ARE TO BE FOLLOWED, NOT TO BE MEASURED.
3. GRADE OF CONCRETE SHALL BE OF M25(1:1:2) U.N.O.
4. GRADE OF REINFORCEMENT STEEL SHALL BE OF Fe500
5. THESE DRAWINGS ARE THE PROPERTY OF M/S TATA CONSULTING ENGINEERS LIMITED. THOSE SHALL NOT BE COPIED, TRANSFERRED, MODIFIED OR USED FOR ANY PURPOSE OTHER THAN FOR THE PLANNING AND CONSTRUCTION OF "INTEGRATED COMMAND CONTROL CENTRE PROJECT AT PANJABARI, GUWAHATI"
6. DE-SHUTTERING PERIOD SHALL NOT BE LESS THAN SPECIFIED BELOW:-
   a) VERTICAL FACES OF COLUMN, BEAM & WALL : 24 HOURS
   b) SLAB (i) SPANNING UPTO 4.5m : 7 DAYS
      (ii) SPANNING OVER 4.5m : 14 DAYS
   c) BEAM (i) SPANNING UPTO 6.0m : 14 DAYS
      (ii) SPANNING OVER 6.0m : 21 DAYS
8. CLEAR COVER TO THE MAIN REINFORCEMENT
   a) FOUNDATION : 60mm
   b) COLUMN UPTO PLINTH : 60mm
   c) COLUMN ABOVE PLINTH : 40mm
   d) BEAM : 25mm
   e) WALL : 30mm
   f) SLAB : 15-20mm
9. LAP & ANCHORAGE SHALL BE OF 50 TIMES OF BAR DIA.
10. NOT MORE THAN 50% OF THE BARS SHALL BE SPLICED AT ONE SECTION
11. USE SPACE BAR TO AVOID CONGESTION, WHEREVER NECESSARY.
12. ANY DISCREPANCY NOTED SHOULD BE BROUGHT TO THE NOTICE OF THE CONSULTANT.
13. THIS DRAWING SHALL BE READ IN CONJUNCTION WITH RELEVANT ARCHITECTURAL DRAWINGS.

TENDER PURPOSE ONLY

SIGN.														
INITIALS														
REVISIONS														
SIGN.														17.04.2020
INITIALS														
ISSUE	DRN	DSN	CHD	CV	EL	IC	ME	PL	HVAC	EXT	LS	PE/PM	APPD	DATE
				CLEARED										

GUWAHATI SMART CITY LIMITED
SMART CITY MISSION GUWAHATI

DETAILS OF FIRST FLOOR BEAM
L SECTION (SHEET 2 / 2)

TATA CONSULTING ENGINEERS LIMITED
MUMBAI

SCALE : AS NOTED
DC & DISC: ---
DWG NO. TCE.10477A-CV-1007-RC-1013
ISSUE R0

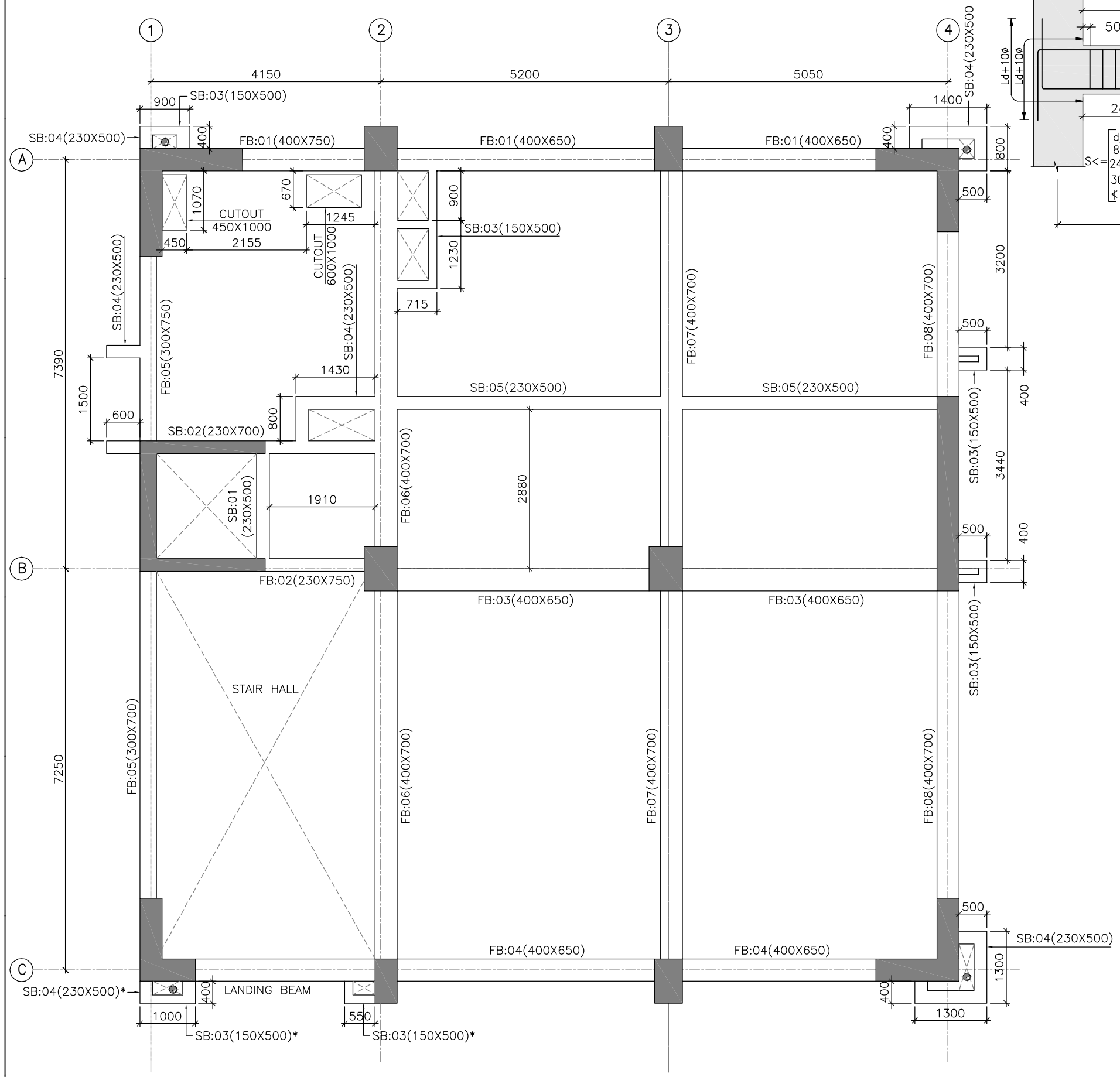

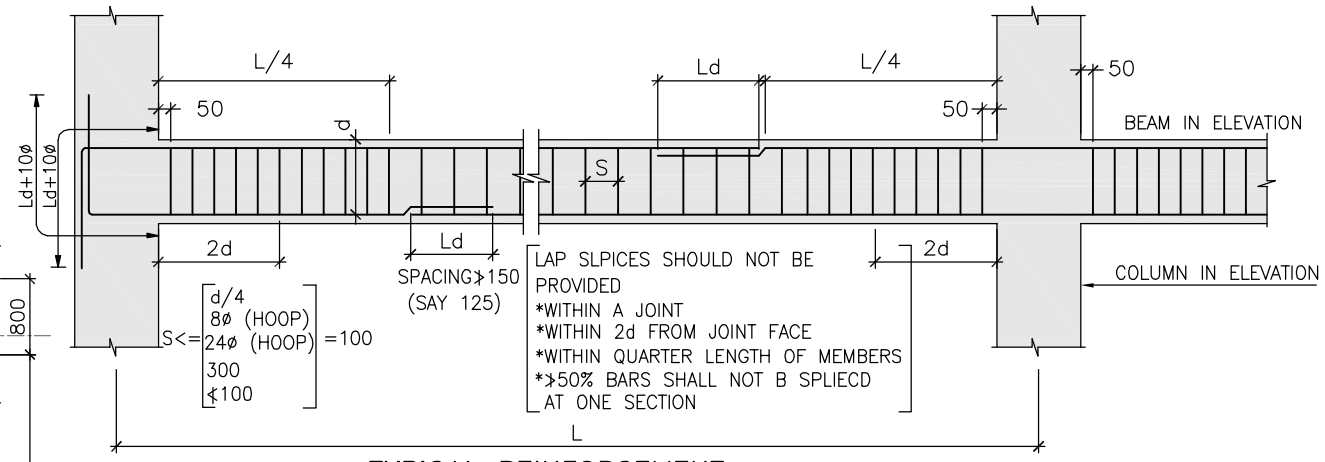

TYPICAL REINFORCEMENT DETAIL OF BEAM

NOTES:

1. ALL DIMENSIONS AND LEVELS ARE IN mm U.N.O.
2. ONLY FIGURED DIMENSIONS ARE TO BE FOLLOWED, NOT TO BE MEASURED.
3. GRADE OF CONCRETE SHALL BE OF M25(1:1:2) U.N.O.
4. GRADE OF REINFORCEMENT STEEL SHALL BE OF Fe500
5. THESE DRAWINGS ARE THE PROPERTY OF M/S TATA CONSULTING ENGINEERS LIMITED. THOSE SHALL NOT BE COPIED, TRANSFERRED, MODIFIED OR USED FOR ANY PURPOSE OTHER THAN FOR THE PLANNING AND CONSTRUCTION OF "INTEGRATED COMMAND CONTROL CENTRE PROJECT AT PANJABARI, GUWAHATI"
6. DE-SHUTTERING PERIOD SHALL NOT BE LESS THAN SPECIFIED BELOW:-
   - a) VERTICAL FACES OF COLUMN, BEAM & WALL : 24 HOURS
   - b) SLAB (i) SPANNING UPTO 4.5m : 7 DAYS
   - (ii) SPANNING OVER 4.5m : 14 DAYS
   - c) BEAM (i) SPANNING UPTO 6.0m : 14 DAYS
   - (ii) SPANNING OVER 6.0m : 21 DAYS
8. CLEAR COVER TO THE MAIN REINFORCEMENT
   - a) FOUNDATION : 60mm
   - b) COLUMN UPTO PLINTH : 60mm
   - c) COLUMN ABOVE PLINTH : 40mm
   - d) BEAM : 25mm
   - e) WALL : 30mm
   - f) SLAB : 15-20mm
9. LAP & ANCHORAGE SHALL BE OF 50 TIMES OF BAR DIA.
10. NOT MORE THAN 50% OF THE BARS SHALL BE SPLICED AT ONE SECTION
11. USE SPACE BAR TO AVOID CONGESTION, WHEREVER NECESSARY.
12. ANY DISCREPANCY NOTED SHOULD BE BROUGHT TO THE NOTICE OF THE CONSULTANT.
13. THIS DRAWING SHALL BE READ IN CONJUNCTION WITH RELEVANT ARCHITECTURAL DRAWINGS.

TENDER PURPOSE ONLY

BEAMS MARKED AS * SHALL BE PLACED AT LANDING LEVEL

RELATED DRAWINGS:

1. TCE.10477A-CV-1007-RC-1001
2. TCE.10477A-CV-1007-RC-1015
3. TCE.10477A-CV-1007-RC-1025

SIGN.													
INITIALS													
REVISIONS													
SIGN.													17.04.2020
INITIALS													
ISSUE	DRN	DSN	CHD	CV	EL	IC	ME	PL	HVAC	EXT	LS	PE/PM	APPD	DATE
				CLEARED										

GUWAHATI SMART CITY LIMITED
SMART CITY MISSION GUWAHATI

DETAILS OF SECOND FLOOR BEAM
BEAM LAYOUT (SHEET 1 / 2)

TATA CONSULTING ENGINEERS LIMITED
MUMBAI

SCALE : AS NOTED
DC & DISC: ---
DWG NO. TCE.10477A-CV-1007-RC-1014
ISSUE R0

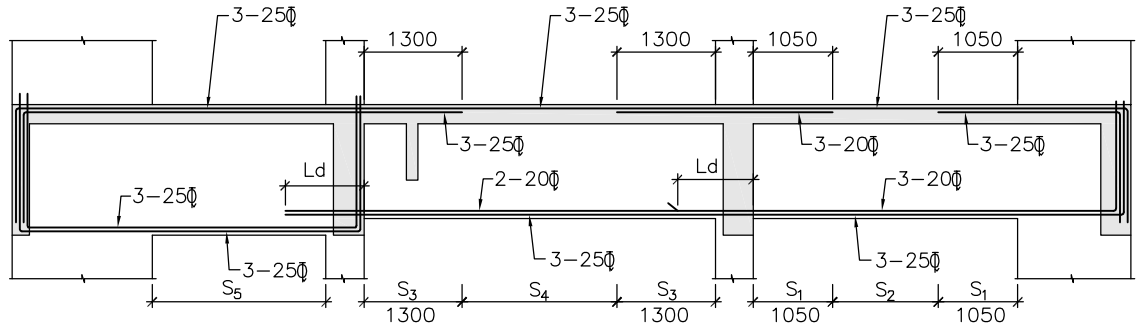

FB:01(400X750) FB:01(400X650) FB:01(400X650)

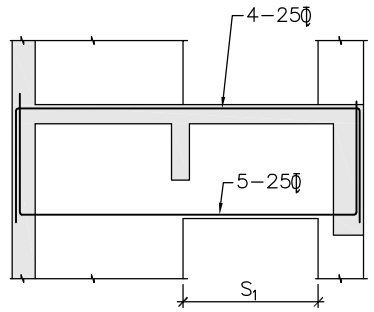

FB:02(230X750)

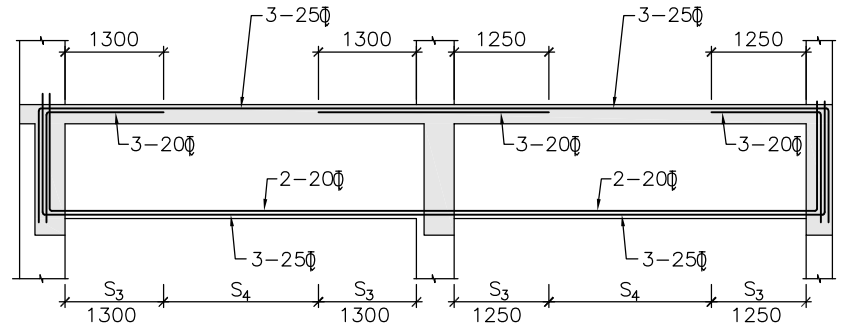

FB:03(400X650)

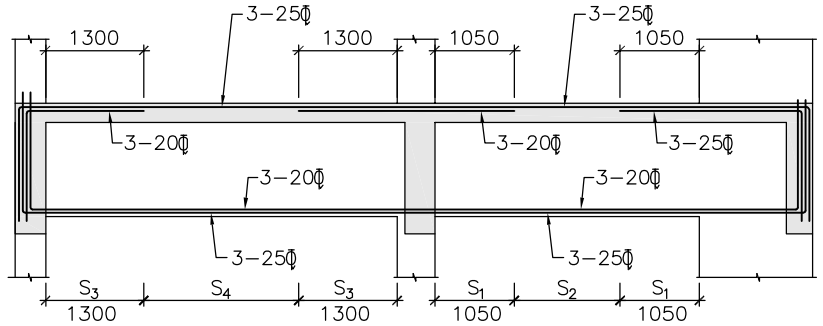

FB:04(400X650)

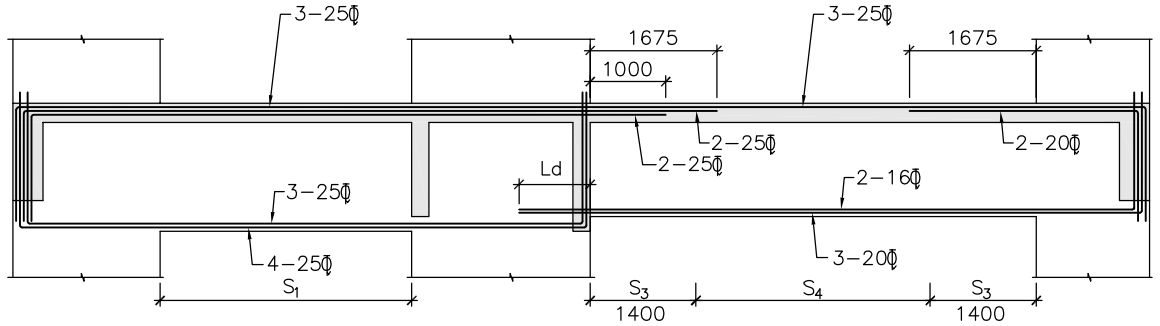

FB:05(300X750) FB:05(300X700)

RELATED DRAWINGS:

1. TCE.10477A-CV-1007-RC-1001
2. TCE.10477A-CV-1007-RC-1014
3. TCE.10477A-CV-1007-RC-1025

LEGEND:

S_1=2L 10Φ@100C/C STP.
S_2=2L 10Φ@150C/C STP.
S_3=2L 8Φ@100C/C STP.
S_4=2L 8Φ@150C/C STP.
S_5=4L 10Φ@100C/C STP.

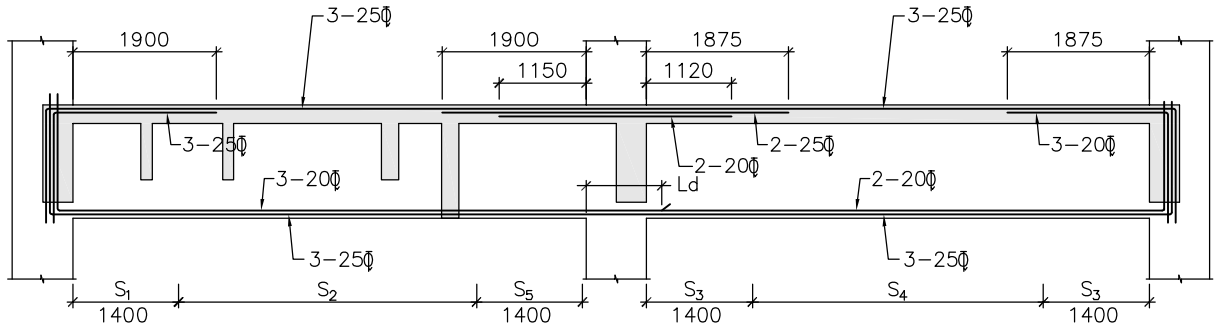

FB:06(400X700)

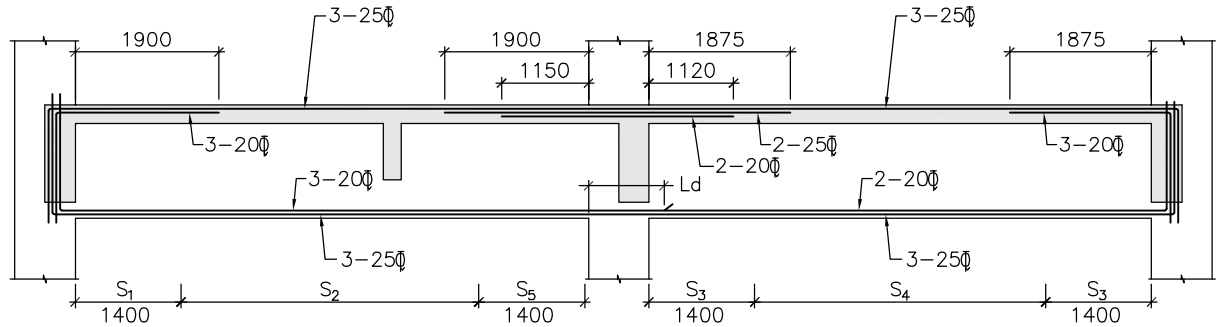

FB:07(400X700)

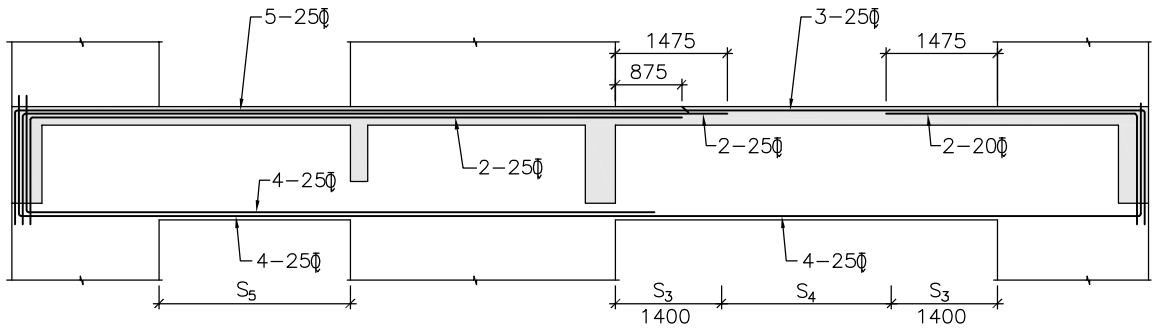

FB:08(400X700)

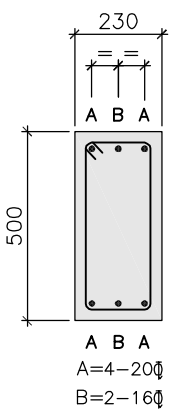

DETAIL OF SB-01

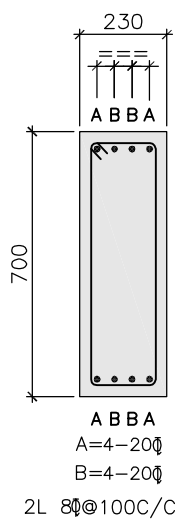

DETAIL OF SB-02

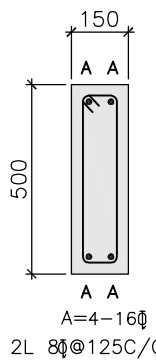

DETAIL OF SB-03

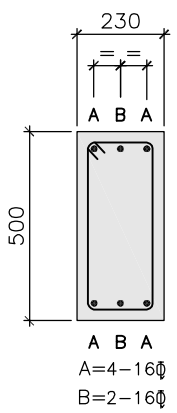

DETAIL OF SB-04

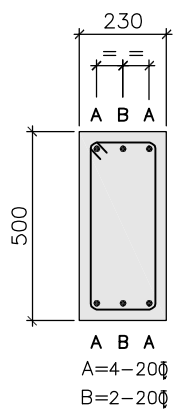

DETAIL OF SB-05

NOTES:

1. ALL DIMENSIONS AND LEVELS ARE IN mm U.N.O.
2. ONLY FIGURED DIMENSIONS ARE TO BE FOLLOWED, NOT TO BE MEASURED.
3. GRADE OF CONCRETE SHALL BE OF M25(1:1:2) U.N.O.
4. GRADE OF REINFORCEMENT STEEL SHALL BE OF Fe500
5. THESE DRAWINGS ARE THE PROPERTY OF M/S TATA CONSULTING ENGINEERS LIMITED. THOSE SHALL NOT BE COPIED, TRANSFERRED, MODIFIED OR USED FOR ANY PURPOSE OTHER THAN FOR THE PLANNING AND CONSTRUCTION OF "INTEGRATED COMMAND CONTROL CENTRE PROJECT AT PANJABARI, GUWAHATI"
6. DE-SHUTTERING PERIOD SHALL NOT BE LESS THAN SPECIFIED BELOW:-
   a) VERTICAL FACES OF COLUMN, BEAM & WALL : 24 HOURS
   b) SLAB (i) SPANNING UPTO 4.5m : 7 DAYS
      (ii) SPANNING OVER 4.5m : 14 DAYS
   c) BEAM (i) SPANNING UPTO 6.0m : 14 DAYS
      (ii) SPANNING OVER 6.0m : 21 DAYS
8. CLEAR COVER TO THE MAIN REINFORCEMENT
   a) FOUNDATION : 60mm
   b) COLUMN UPTO PLINTH : 60mm
   c) COLUMN ABOVE PLINTH : 40mm
   d) BEAM : 25mm
   e) WALL : 30mm
   f) SLAB : 15-20mm
9. LAP & ANCHORAGE SHALL BE OF 50 TIMES OF BAR DIA.
10. NOT MORE THAN 50% OF THE BARS SHALL BE SPLICED AT ONE SECTION
11. USE SPACE BAR TO AVOID CONGESTION, WHEREVER NECESSARY.
12. ANY DISCREPANCY NOTED SHOULD BE BROUGHT TO THE NOTICE OF THE CONSULTANT.
13. THIS DRAWING SHALL BE READ IN CONJUNCTION WITH RELEVANT ARCHITECTURAL DRAWINGS.
14. BEAMS MARKED AS * SHALL BE PLACED AT LANDING LEVEL

TENDER PURPOSE ONLY

SIGN.													
INITIALS													
REVISIONS													
SIGN.													17.04.2020
INITIALS													
ISSUE	DRN	DSN	CHD	CV	EL	IC	ME	PL	HVAC	EXT	LS	PE/PM	APPD	DATE
				CLEARED									

GUWAHATI SMART CITY LIMITED
SMART CITY MISSION GUWAHATI

DETAILS OF SECOND FLOOR BEAM
L SECTION (SHEET 2 / 2)

TATA CONSULTING ENGINEERS LIMITED
MUMBAI

SCALE : AS NOTED
DC & DISC : ---
DWG NO. TCE.10477A-CV-1007-RC-1015
ISSUE R0

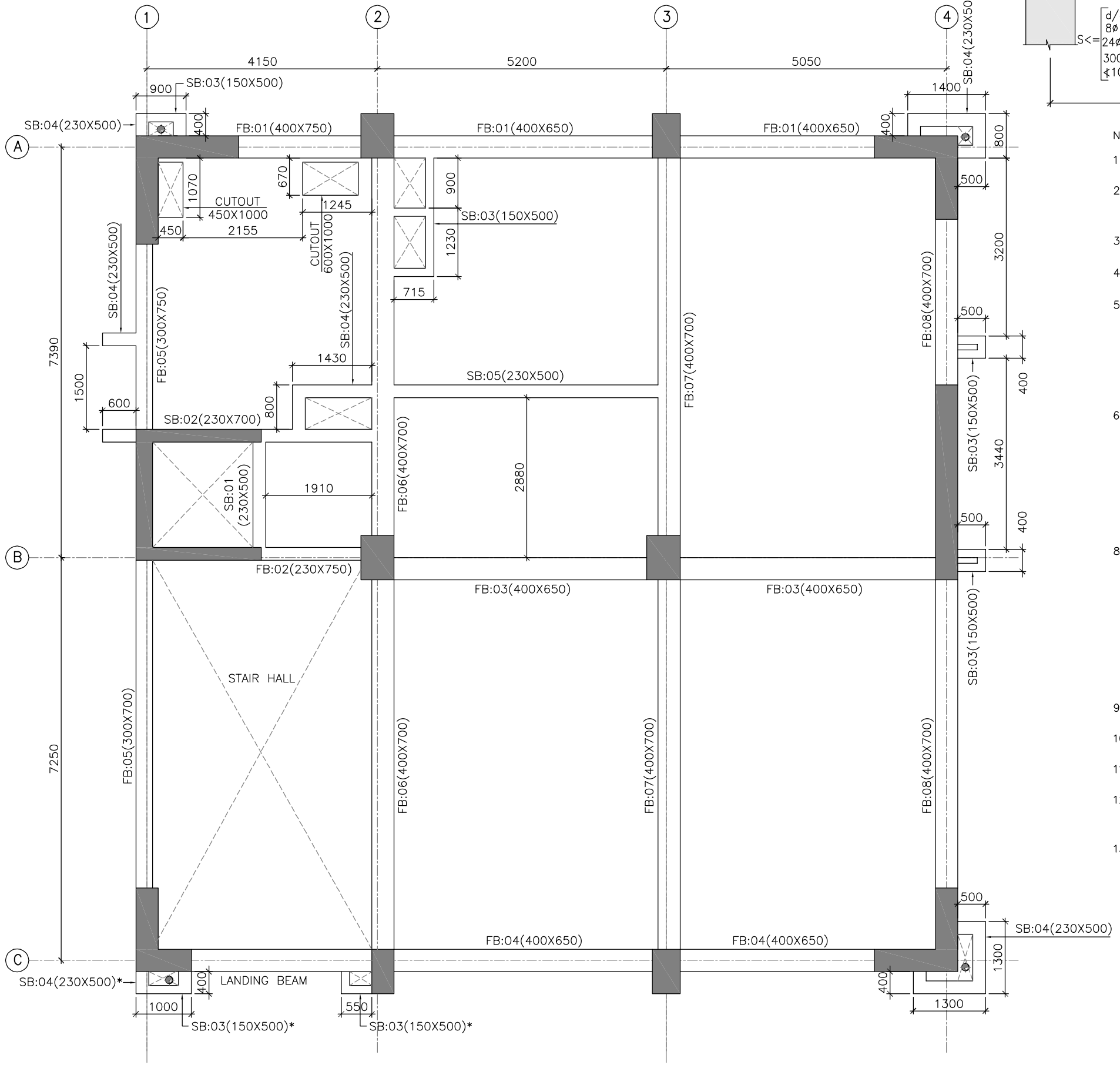

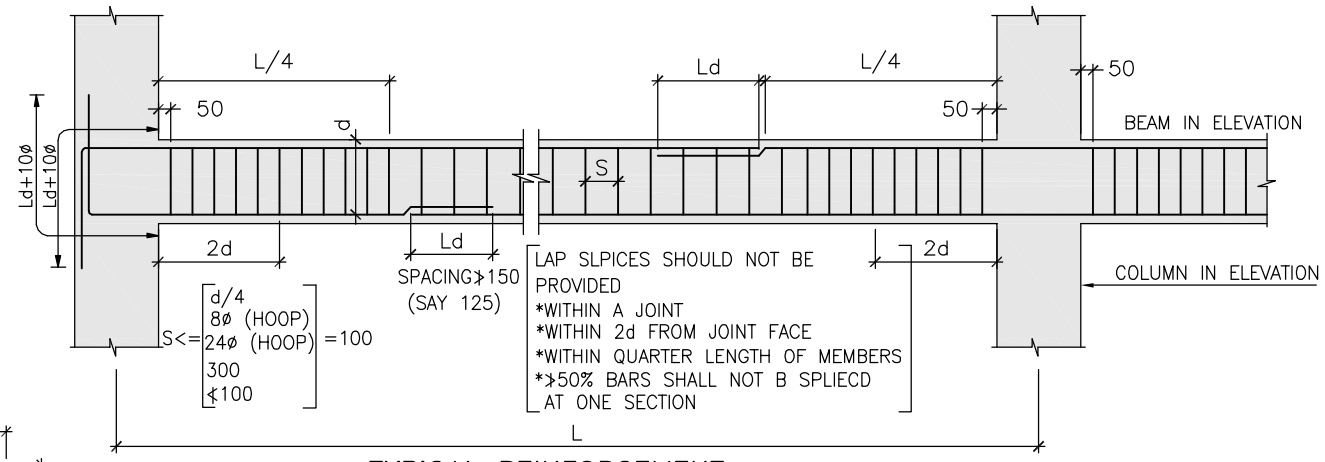

TYPICAL REINFORCEMENT DETAIL OF BEAM

NOTES:

1. ALL DIMENSIONS AND LEVELS ARE IN mm U.N.O.
2. ONLY FIGURED DIMENSIONS ARE TO BE FOLLOWED, NOT TO BE MEASURED.
3. GRADE OF CONCRETE SHALL BE OF M25(1:1:2) U.N.O.
4. GRADE OF REINFORCEMENT STEEL SHALL BE OF Fe500
5. THESE DRAWINGS ARE THE PROPERTY OF M/S TATA CONSULTING ENGINEERS LIMITED. THOSE SHALL NOT BE COPIED, TRANSFERRED, MODIFIED OR USED FOR ANY PURPOSE OTHER THAN FOR THE PLANNING AND CONSTRUCTION OF "INTEGRATED COMMAND CONTROL CENTRE PROJECT AT PANJABARI, GUWAHATI"
6. DE-SHUTTERING PERIOD SHALL NOT BE LESS THAN SPECIFIED BELOW:-
   a) VERTICAL FACES OF COLUMN, BEAM & WALL : 24 HOURS
   b) SLAB (i) SPANNING UPTO 4.5m : 7 DAYS
      (ii) SPANNING OVER 4.5m : 14 DAYS
   c) BEAM (i) SPANNING UPTO 6.0m : 14 DAYS
      (ii) SPANNING OVER 6.0m : 21 DAYS
8. CLEAR COVER TO THE MAIN REINFORCEMENT
   a) FOUNDATION : 60mm
   b) COLUMN UPTO PLINTH : 60mm
   c) COLUMN ABOVE PLINTH : 40mm
   d) BEAM : 25mm
   e) WALL : 30mm
   f) SLAB : 15-20mm
9. LAP & ANCHORAGE SHALL BE OF 50 TIMES OF BAR DIA.
10. NOT MORE THAN 50% OF THE BARS SHALL BE SPLICED AT ONE SECTION
11. USE SPACE BAR TO AVOID CONGESTION, WHEREVER NECESSARY.
12. ANY DISCREPANCY NOTED SHOULD BE BROUGHT TO THE NOTICE OF THE CONSULTANT.
13. THIS DRAWING SHALL BE READ IN CONJUNCTION WITH RELEVANT ARCHITECTURAL DRAWINGS.

BEAMS MARKED AS * SHALL BE PLACED AT LANDING LEVEL

RELATED DRAWINGS:

1. TCE.10477A-CV-1007-RC-1001
2. TCE.10477A-CV-1007-RC-1017
3. TCE.10477A-CV-1007-RC-1026

TENDER PURPOSE ONLY

SIGN.													
INITIALS													
REVISIONS													
SIGN.													17.04.2020
INITIALS													
ISSUE	DRN	DSN	CHD	CV	EL	IC	ME	PL	HVAC	EXT	LS	PE/PM	APPD	DATE
				CLEARED										

GUWAHATI SMART CITY LIMITED
SMART CITY MISSION GUWAHATI

DETAILS OF THIRD FLOOR BEAM
BEAM LAYOUT (SHEET 1 / 2)

TATA CONSULTING ENGINEERS LIMITED
MUMBAI

SCALE : AS NOTED
DC & DISC: ---
DWG NO. TCE.10477A-CV-1007-RC-1016
ISSUE R0

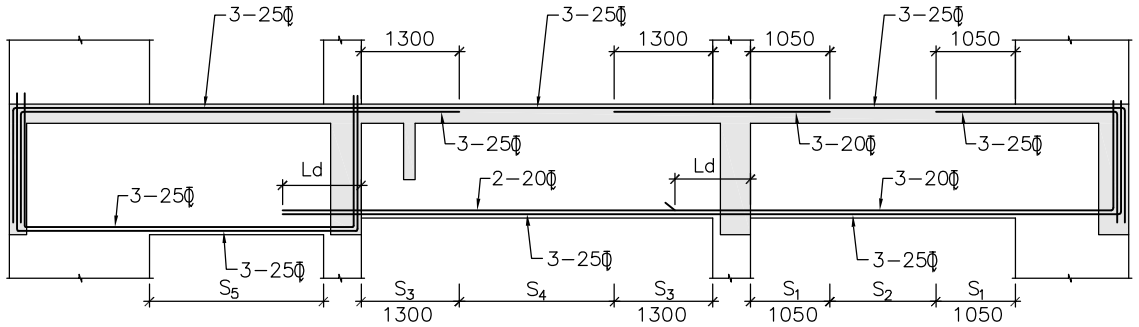

FB:01(400X750) FB:01(400X650) FB:01(400X650)

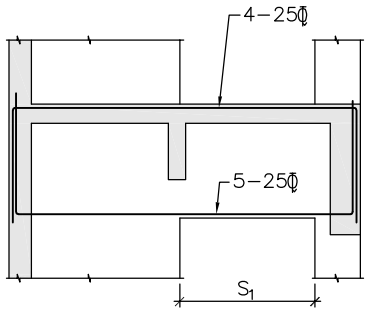

FB:02(230X750)

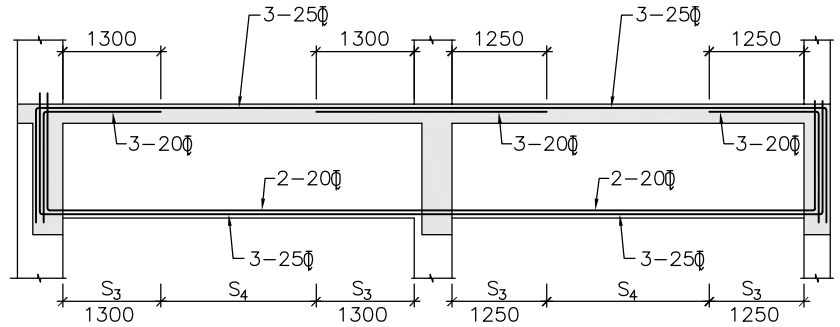

FB:03(400X650)

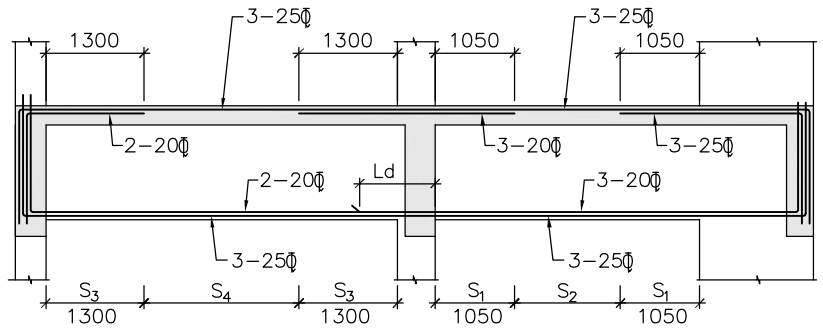

FB:04(400X650)

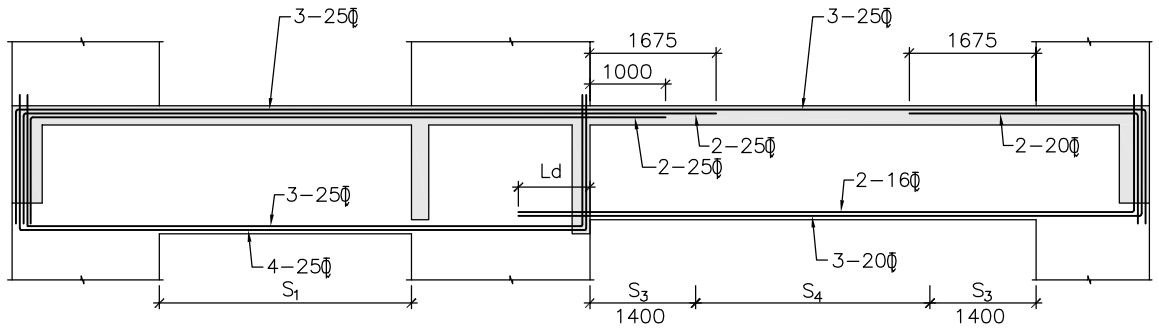

FB:05(300X750) FB:05(300X700)

RELATED DRAWINGS:

1. TCE.10477A-CV-1007-RC-1001
2. TCE.10477A-CV-1007-RC-1016
3. TCE.10477A-CV-1007-RC-1026

LEGEND:

S_1=2L 10Φ@100C/C STP.
S_2=2L 10Φ@150C/C STP.
S_3=2L 8Φ@100C/C STP.
S_4=2L 8Φ@150C/C STP.
S_5=4L 10Φ@100C/C STP.
S_6=4L 10Φ@150C/C STP.

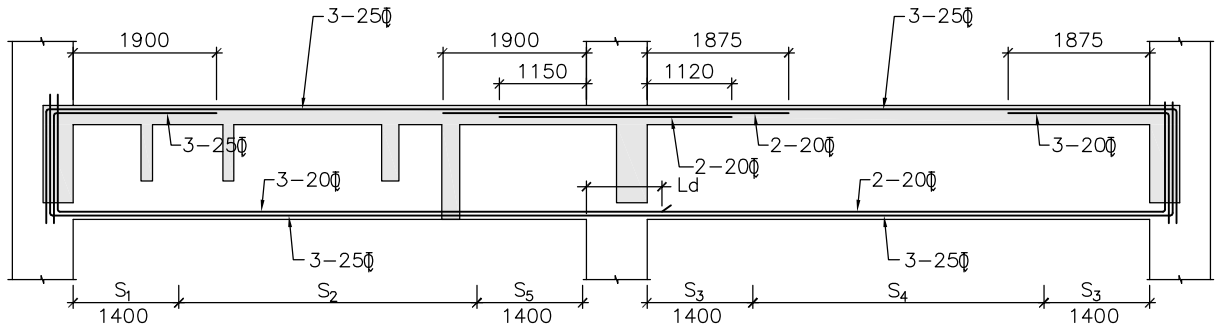

FB:06(400X700)

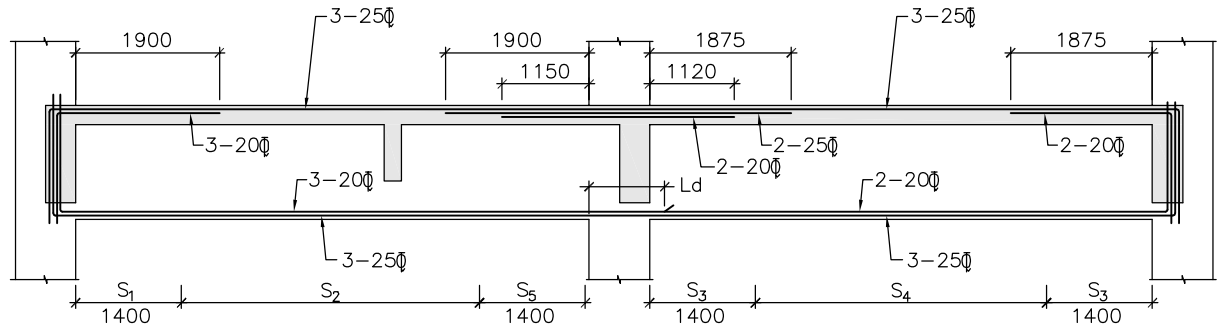

FB:07(400X700)

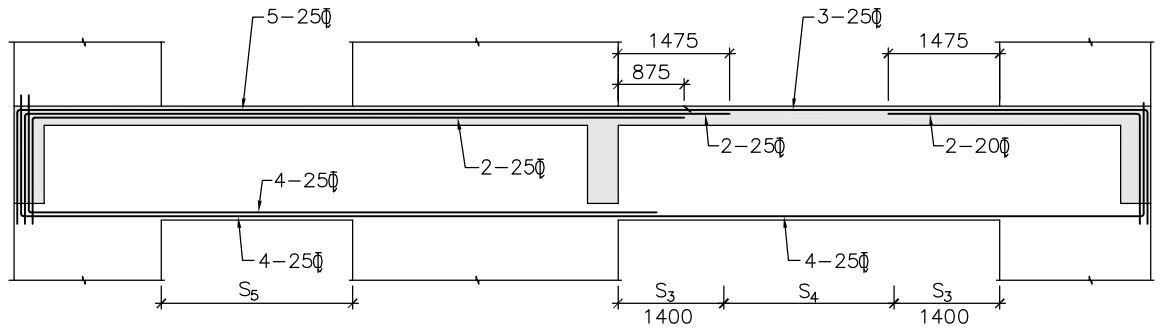

FB:08(400X700)

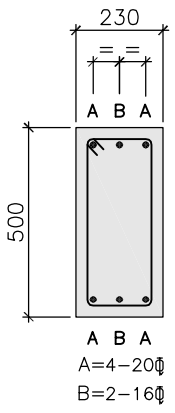

2L 8Φ@100C/C STP.

DETAIL OF SB-01

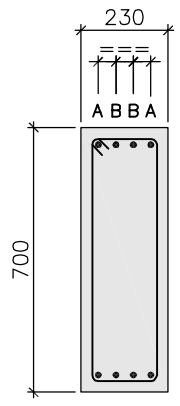

2L 8Φ@100C/C STP.

DETAIL OF SB-02

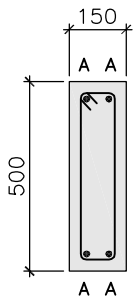

2L 8Φ@125C/C STP.

DETAIL OF SB-03

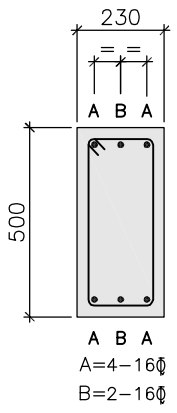

2L 8Φ@100C/C STP.

DETAIL OF SB-04

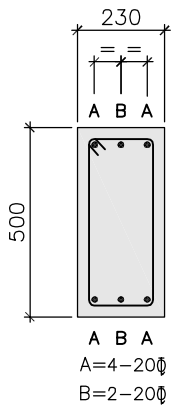

2L 8Φ@100C/C STP.

DETAIL OF SB-05

NOTES:

1. ALL DIMENSIONS AND LEVELS ARE IN mm U.N.O.
2. ONLY FIGURED DIMENSIONS ARE TO BE FOLLOWED, NOT TO BE MEASURED.
3. GRADE OF CONCRETE SHALL BE OF M25(1:1:2) U.N.O.
4. GRADE OF REINFORCEMENT STEEL SHALL BE OF Fe500
5. THESE DRAWINGS ARE THE PROPERTY OF M/S TATA CONSULTING ENGINEERS LIMITED. THOSE SHALL NOT BE COPIED, TRANSFERRED, MODIFIED OR USED FOR ANY PURPOSE OTHER THAN FOR THE PLANNING AND CONSTRUCTION OF "INTEGRATED COMMAND CONTROL CENTRE PROJECT AT PANJABARI, GUWAHATI"
6. DE-SHUTTERING PERIOD SHALL NOT BE LESS THAN SPECIFIED BELOW:-

a)	VERTICAL FACES OF COLUMN, BEAM & WALL		:	24 HOURS
b)	SLAB	(i) SPANNING UPTO 4.5m	:	7 DAYS
		(ii) SPANNING OVER 4.5m	:	14 DAYS
c)	BEAM	(i) SPANNING UPTO 6.0m	:	14 DAYS
		(ii) SPANNING OVER 6.0m	:	21 DAYS

8. CLEAR COVER TO THE MAIN REINFORCEMENT

a)	FOUNDATION	:	60mm
b)	COLUMN UPTO PLINTH	:	60mm
c)	COLUMN ABOVE PLINTH	:	40mm
d)	BEAM	:	25mm
e)	WALL	:	30mm
f)	SLAB	:	15-20mm

9. LAP & ANCHORAGE SHALL BE OF 50 TIMES OF BAR DIA.
10. NOT MORE THAN 50% OF THE BARS SHALL BE SPLICED AT ONE SECTION
11. USE SPACE BAR TO AVOID CONGESTION, WHEREVER NECESSARY.
12. ANY DISCREPANCY NOTED SHOULD BE BROUGHT TO THE NOTICE OF THE CONSULTANT.
13. THIS DRAWING SHALL BE READ IN CONJUNCTION WITH RELEVANT ARCHITECTURAL DRAWINGS.
14. BEAMS MARKED AS * SHALL BE PLACED AT LANDING LEVEL

TENDER PURPOSE ONLY

SIGN.													
INITIALS													
REVISIONS													
SIGN.													17.04.2020
INITIALS													
ISSUE	DRN	DSN	CHD	CV	EL	IC	ME	PL	HVAC	EXT	LS	PE/PM	APPD	DATE
				CLEARED									

GUWAHATI SMART CITY LIMITED
SMART CITY MISSION GUWAHATI

DETAILS OF THIRD FLOOR BEAM
L SECTION (SHEET 2 / 2)

TATA CONSULTING ENGINEERS LIMITED
MUMBAI

SCALE : AS NOTED
DC & DISC: ---
DWG NO. TCE.10477A-CV-1007-RC-1017
ISSUE R0

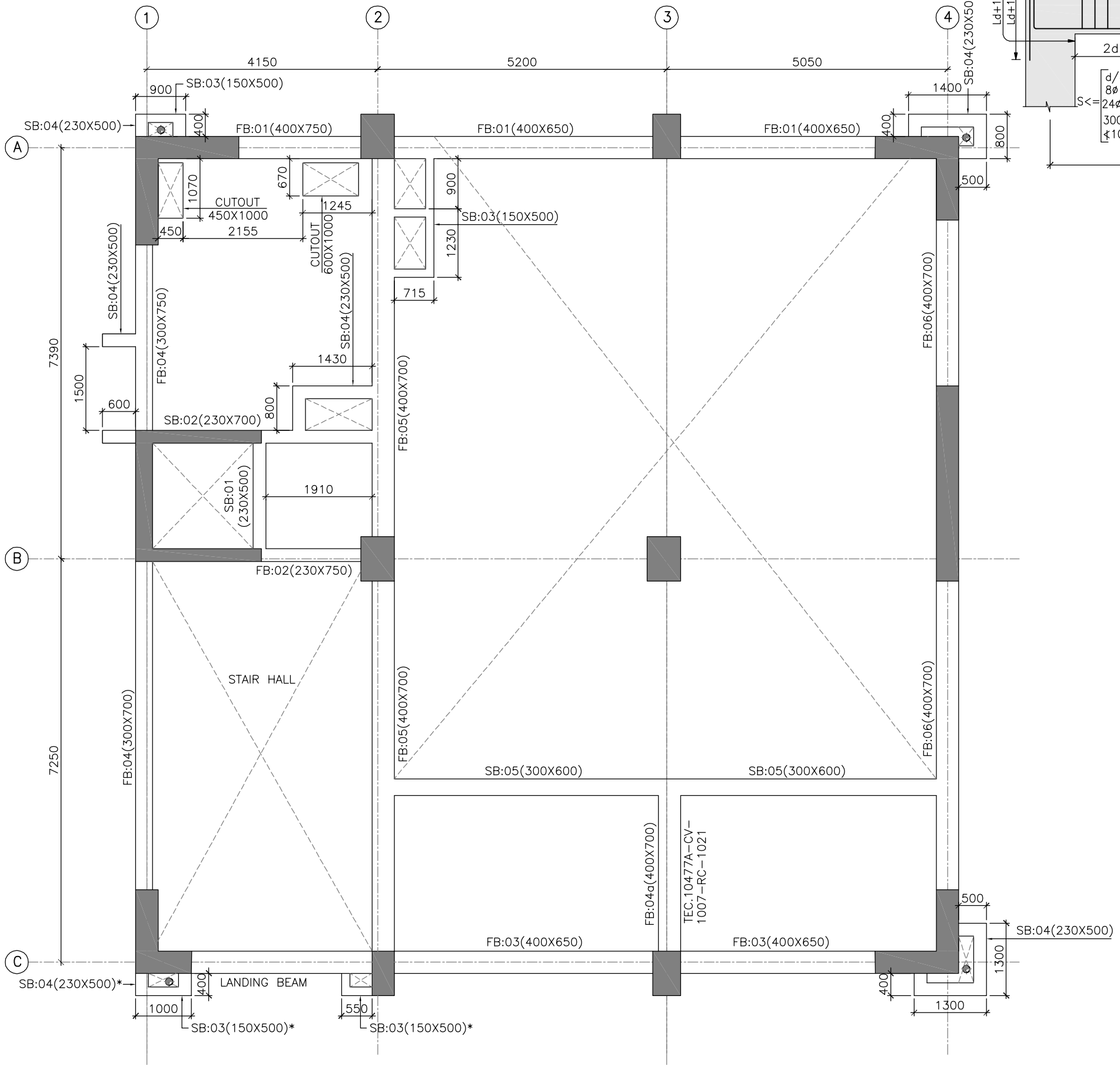

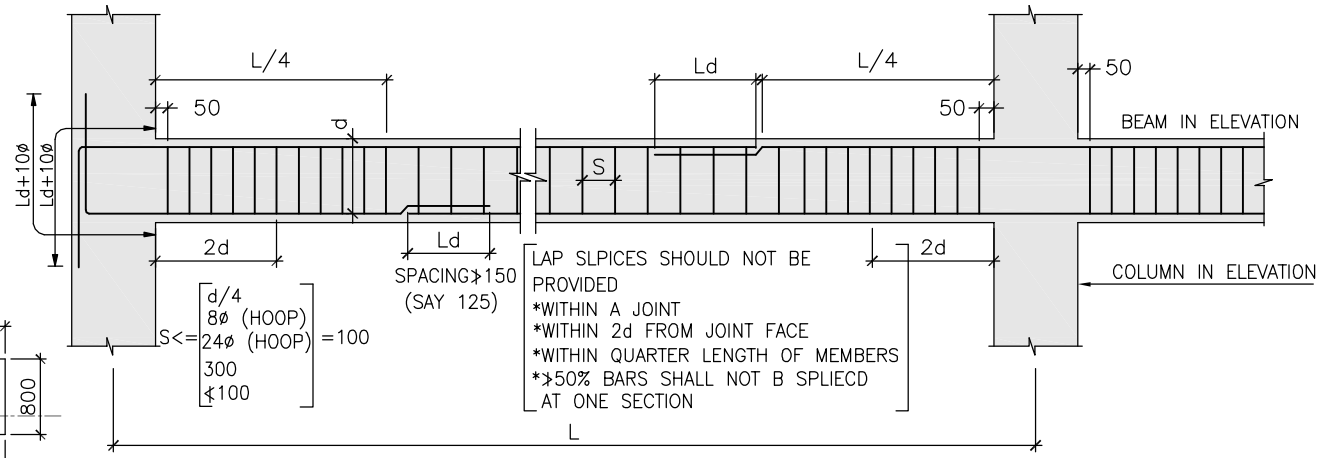

TYPICAL REINFORCEMENT DETAIL OF BEAM

NOTES:

1. ALL DIMENSIONS AND LEVELS ARE IN mm U.N.O.
2. ONLY FIGURED DIMENSIONS ARE TO BE FOLLOWED, NOT TO BE MEASURED.
3. GRADE OF CONCRETE SHALL BE OF M25(1:1:2) U.N.O.
4. GRADE OF REINFORCEMENT STEEL SHALL BE OF Fe500
5. THESE DRAWINGS ARE THE PROPERTY OF M/S TATA CONSULTING ENGINEERS LIMITED. THOSE SHALL NOT BE COPIED, TRANSFERRED, MODIFIED OR USED FOR ANY PURPOSE OTHER THAN FOR THE PLANNING AND CONSTRUCTION OF "INTEGRATED COMMAND CONTROL CENTRE PROJECT AT PANJABARI, GUWAHATI"
6. DE-SHUTTERING PERIOD SHALL NOT BE LESS THAN SPECIFIED BELOW:-
   - a) VERTICAL FACES OF COLUMN, BEAM & WALL : 24 HOURS
   - b) SLAB (i) SPANNING UPTO 4.5m : 7 DAYS
   - (ii) SPANNING OVER 4.5m : 14 DAYS
   - c) BEAM (i) SPANNING UPTO 6.0m : 14 DAYS
   - (ii) SPANNING OVER 6.0m : 21 DAYS
8. CLEAR COVER TO THE MAIN REINFORCEMENT
   - a) FOUNDATION : 60mm
   - b) COLUMN UPTO PLINTH : 60mm
   - c) COLUMN ABOVE PLINTH : 40mm
   - d) BEAM : 25mm
   - e) WALL : 30mm
   - f) SLAB : 15-20mm
9. LAP & ANCHORAGE SHALL BE OF 50 TIMES OF BAR DIA.
10. NOT MORE THAN 50% OF THE BARS SHALL BE SPLICED AT ONE SECTION
11. USE SPACE BAR TO AVOID CONGESTION, WHEREVER NECESSARY.
12. ANY DISCREPANCY NOTED SHOULD BE BROUGHT TO THE NOTICE OF THE CONSULTANT.
13. THIS DRAWING SHALL BE READ IN CONJUNCTION WITH RELEVANT ARCHITECTURAL DRAWINGS.

TENDER PURPOSE ONLY

BEAMS MARKED AS * SHALL BE PLACED AT LANDING LEVEL

RELATED DRAWINGS:

1. TCE.10477A-CV-1007-RC-1001
2. TCE.10477A-CV-1007-RC-1019
3. TCE.10477A-CV-1007-RC-1020
4. TCE.10477A-CV-1007-RC-1021
5. TCE.10477A-CV-1007-RC-1027
6. TCE.10477A-CV-1007-RC-1028

SIGN.														
INITIALS														
REVISIONS														
SIGN.														17.04.2020
INITIALS														
ISSUE	DRN	DSN	CHD	CV	EL	IC	ME	PL	HVAC	EXT	LS	PE/PM	APPD	DATE
				CLEARED										

GUWAHATI SMART CITY LIMITED

SMART CITY MISSION GUWAHATI

DETAILS OF FOURTH FLOOR BEAM (EL +18550)
BEAM LAYOUT (SHEET 1 / 2)

TATA CONSULTING ENGINEERS LIMITED
MUMBAI

SCALE : AS NOTED
DC & DISC : ---
DWG NO. TCE.10477A-CV-1007-RC-1018
ISSUE R0

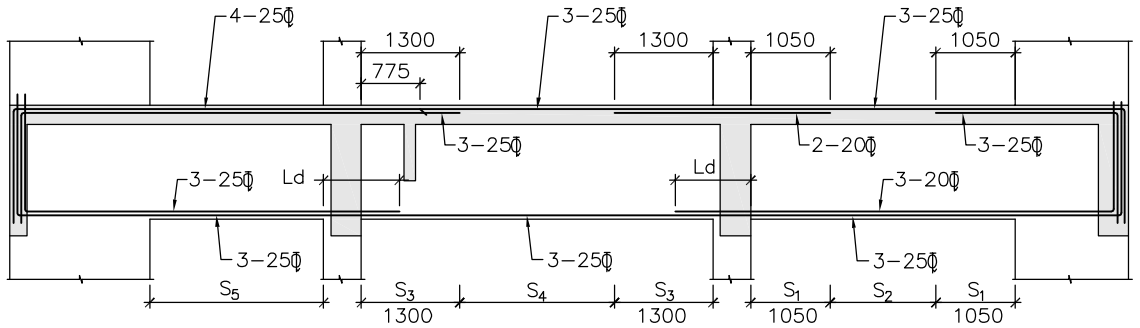

FB:01(400X650)

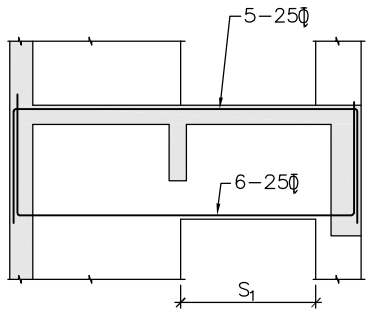

FB:02(230X750)

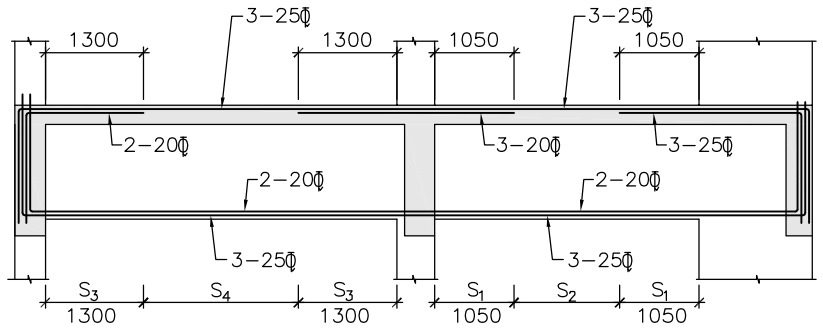

FB:03(400X650)

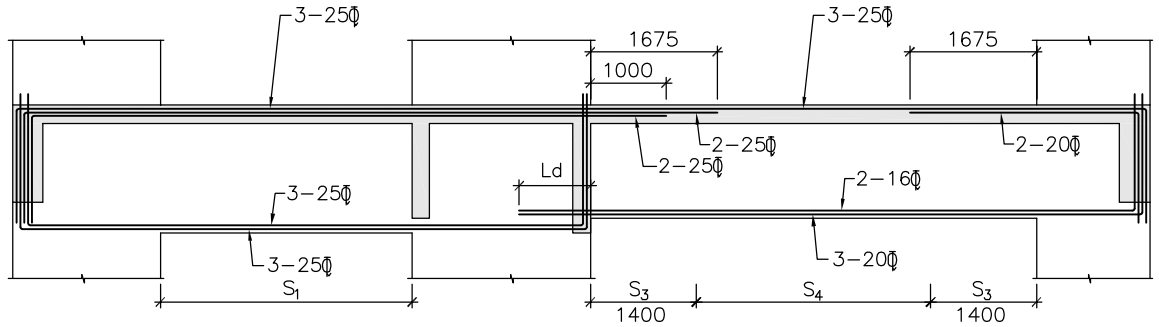

FB:04(300X750)

FB:04(300X700)

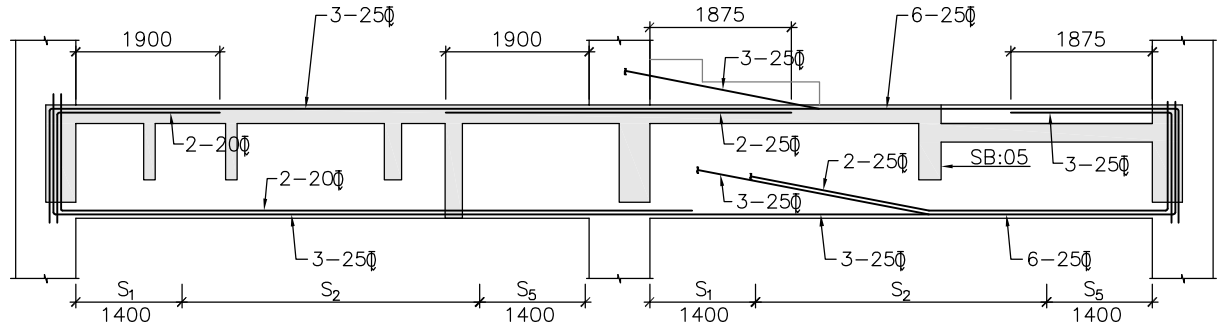

FB:05(400X700)

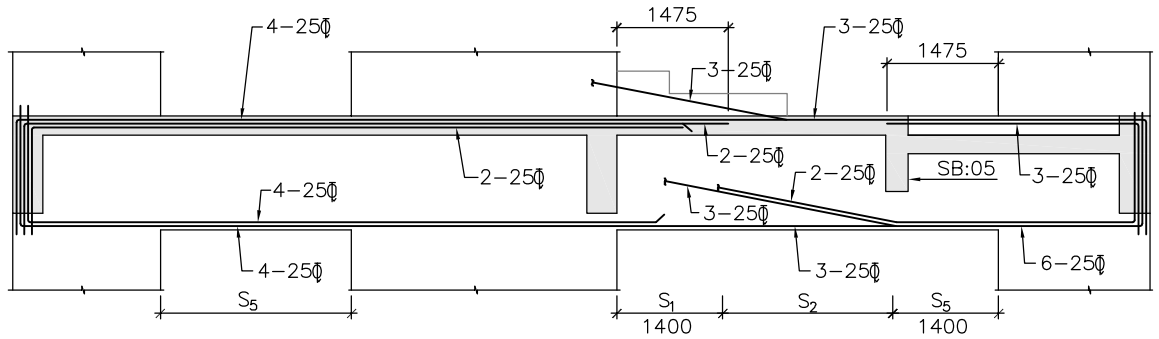

FB:06(400X700)

RELATED DRAWINGS:

1. TCE.10477A-CV-1007-RC-1001
2. TCE.10477A-CV-1007-RC-1018
3. TCE.10477A-CV-1007-RC-1020
4. TCE.10477A-CV-1007-RC-1021
5. TCE.10477A-CV-1007-RC-1027
6. TCE.10477A-CV-1007-RC-1028

LEGEND:

S_1=2L 10Φ@100C/C STP.
S_2=2L 10Φ@150C/C STP.
S_3=2L 8Φ@100C/C STP.
S_4=2L 8Φ@150C/C STP.
S_5=4L 10Φ@100C/C STP.
S_6=4L 10Φ@150C/C STP.

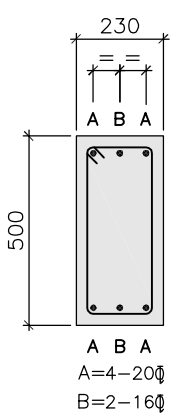

DETAIL OF SB-01

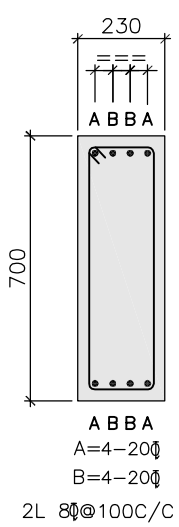

DETAIL OF SB-02

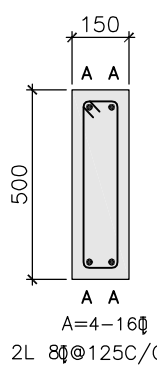

DETAIL OF SB-03

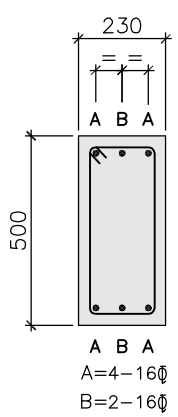

DETAIL OF SB-04

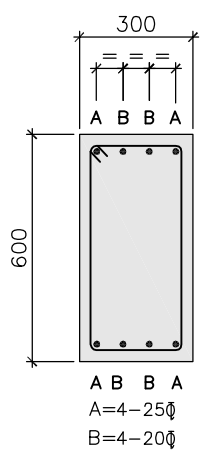

DETAIL OF SB-05

NOTES:

1. ALL DIMENSIONS AND LEVELS ARE IN mm U.N.O.
2. ONLY FIGURED DIMENSIONS ARE TO BE FOLLOWED, NOT TO BE MEASURED.
3. GRADE OF CONCRETE SHALL BE OF M25(1:1:2) U.N.O.
4. GRADE OF REINFORCEMENT STEEL SHALL BE OF Fe500
5. THESE DRAWINGS ARE THE PROPERTY OF M/S TATA CONSULTING ENGINEERS LIMITED. THOSE SHALL NOT BE COPIED, TRANSFERRED, MODIFIED OR USED FOR ANY PURPOSE OTHER THAN FOR THE PLANNING AND CONSTRUCTION OF "INTEGRATED COMMAND CONTROL CENTRE PROJECT AT PANJABARI, GUWAHATI"
6. DE-SHUTTERING PERIOD SHALL NOT BE LESS THAN SPECIFIED BELOW:-
   a) VERTICAL FACES OF COLUMN, BEAM & WALL : 24 HOURS
   b) SLAB (i) SPANNING UPTO 4.5m : 7 DAYS
      (ii) SPANNING OVER 4.5m : 14 DAYS
   c) BEAM (i) SPANNING UPTO 6.0m : 14 DAYS
      (ii) SPANNING OVER 6.0m : 21 DAYS
8. CLEAR COVER TO THE MAIN REINFORCEMENT
   a) FOUNDATION : 60mm
   b) COLUMN UPTO PLINTH : 60mm
   c) COLUMN ABOVE PLINTH : 40mm
   d) BEAM : 25mm
   e) WALL : 30mm
   f) SLAB : 15-20mm
9. LAP & ANCHORAGE SHALL BE OF 50 TIMES OF BAR DIA.
10. NOT MORE THAN 50% OF THE BARS SHALL BE SPLICED AT ONE SECTION
11. USE SPACE BAR TO AVOID CONGESTION, WHEREVER NECESSARY.
12. ANY DISCREPANCY NOTED SHOULD BE BROUGHT TO THE NOTICE OF THE CONSULTANT.
13. THIS DRAWING SHALL BE READ IN CONJUNCTION WITH RELEVANT ARCHITECTURAL DRAWINGS.
14. BEAMS MARKED AS * SHALL BE PLACED AT LANDING LEVEL

TENDER PURPOSE ONLY

SIGN.													
INITIALS													
REVISIONS													
SIGN.													17.04.2020
INITIALS													
ISSUE	DRN	DSN	CHD	CV	EL	IC	ME	PL	HVAC	EXT	LS	PE/PM	APPD	DATE
				CLEARED									

GUWAHATI SMART CITY LIMITED
SMART CITY MISSION GUWAHATI

DETAILS OF FOURTH FLOOR BEAM (EL+18550)
L SECTION (SHEET 2 / 2)

TATA CONSULTING ENGINEERS LIMITED
MUMBAI

SCALE : AS NOTED
DC & DISC: ---
DWG NO. TCE.10477A-CV-1007-RC-1019
ISSUE R0

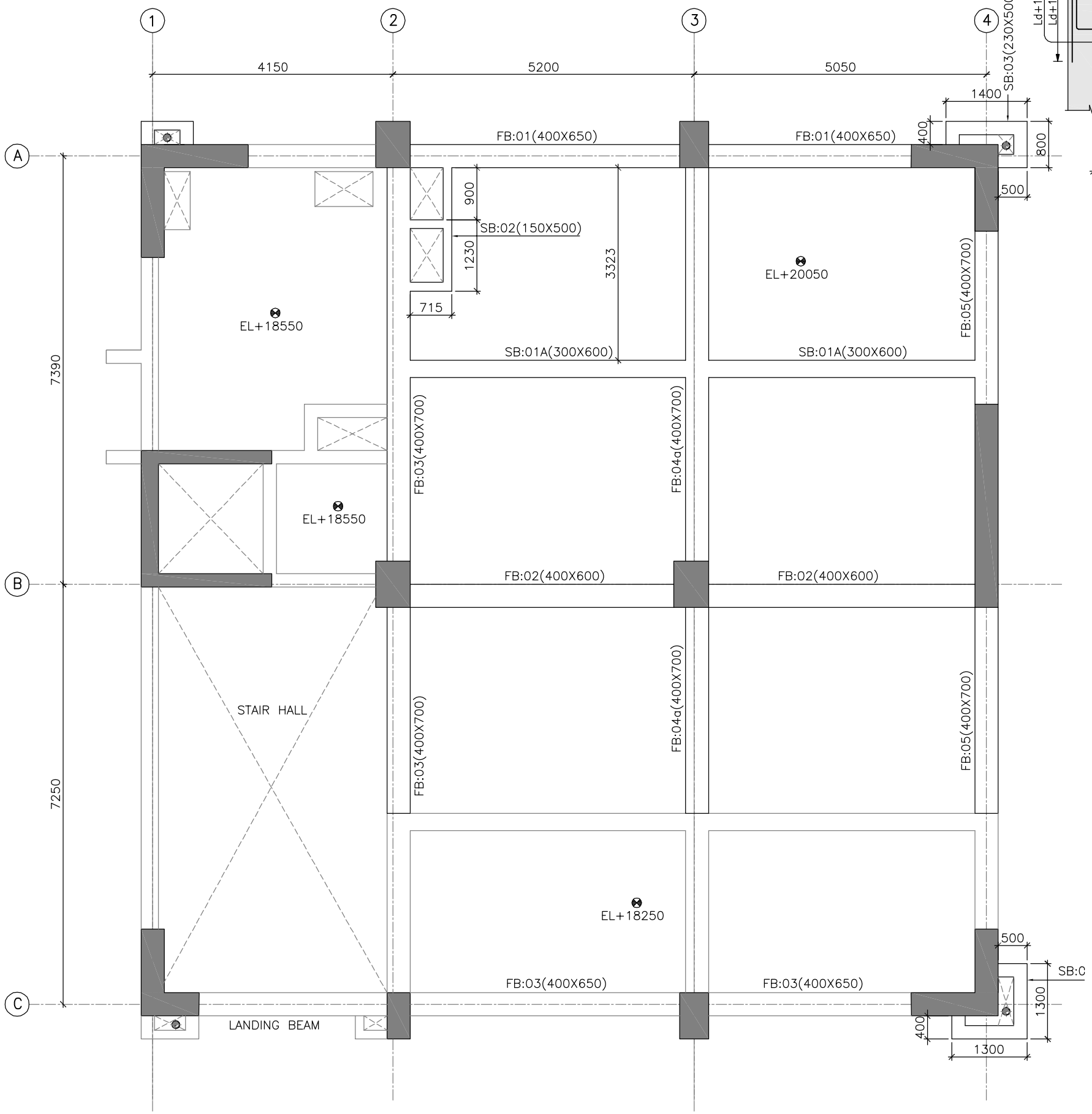

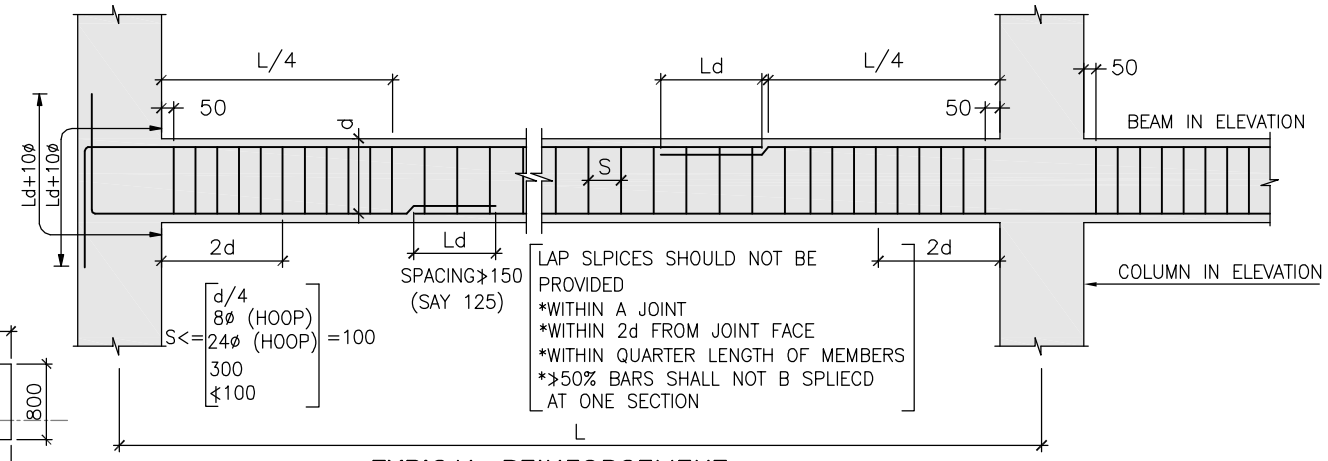

TYPICAL REINFORCEMENT DETAIL OF BEAM

NOTES:

1. ALL DIMENSIONS AND LEVELS ARE IN mm U.N.O.
2. ONLY FIGURED DIMENSIONS ARE TO BE FOLLOWED, NOT TO BE MEASURED.
3. GRADE OF CONCRETE SHALL BE OF M25(1:1:2) U.N.O.
4. GRADE OF REINFORCEMENT STEEL SHALL BE OF Fe500
5. THESE DRAWINGS ARE THE PROPERTY OF M/S TATA CONSULTING ENGINEERS LIMITED. THOSE SHALL NOT BE COPIED, TRANSFERRED, MODIFIED OR USED FOR ANY PURPOSE OTHER THAN FOR THE PLANNING AND CONSTRUCTION OF "INTEGRATED COMMAND CONTROL CENTRE PROJECT AT PANJABARI, GUWAHATI"
6. DE–SHUTTERING PERIOD SHALL NOT BE LESS THAN SPECIFIED BELOW: –
   - a) VERTICAL FACES OF COLUMN, BEAM & WALL : 24 HOURS
   - b) SLAB (i) SPANNING UPTO 4.5m : 7 DAYS
   - (ii) SPANNING OVER 4.5m : 14 DAYS
   - c) BEAM (i) SPANNING UPTO 6.0m : 14 DAYS
   - (ii) SPANNING OVER 6.0m : 21 DAYS
8. CLEAR COVER TO THE MAIN REINFORCEMENT
   - a) FOUNDATION : 60mm
   - b) COLUMN UPTO PLINTH : 60mm
   - c) COLUMN ABOVE PLINTH : 40mm
   - d) BEAM : 25mm
   - e) WALL : 30mm
   - f) SLAB : 15–20mm
9. LAP & ANCHORAGE SHALL BE OF 50 TIMES OF BAR DIA.
10. NOT MORE THAN 50% OF THE BARS SHALL BE SPLICED AT ONE SECTION
11. USE SPACE BAR TO AVOID CONGESTION, WHEREVER NECESSARY.
12. ANY DISCREPANCY NOTED SHOULD BE BROUGHT TO THE NOTICE OF THE CONSULTANT.
13. THIS DRAWING SHALL BE READ IN CONJUNCTION WITH RELEVANT ARCHITECTURAL DRAWINGS.

RELATED DRAWINGS:

1. TCE.10477A–CV–1007–RC–1001
2. TCE.10477A–CV–1007–RC–1018
3. TCE.10477A–CV–1007–RC–1019
4. TCE.10477A–CV–1007–RC–1021
5. TCE.10477A–CV–1007–RC–1027
6. TCE.10477A–CV–1007–RC–1028

TENDER PURPOSE ONLY

SIGN.														
INITIALS														
REVISIONS														
SIGN.														17.04.2020
INITIALS														
ISSUE	DRN	DSN	CHD	CV	EL	IC	ME	PL	HVAC	EXT	LS	PE/PM	APPD	DATE
				CLEARED										

GUWAHATI SMART CITY LIMITED
SMART CITY MISSION GUWAHATI

DETAILS OF FOURTH FLOOR BEAM (EL+18550/+20050)
BEAM LAYOUT (SHEET 1 / 2)

TATA CONSULTING ENGINEERS LIMITED
MUMBAI

SCALE : AS NOTED
DC & DISC : ---
DWG NO. TCE.10477A–CV–1007–RC–1020
ISSUE R0

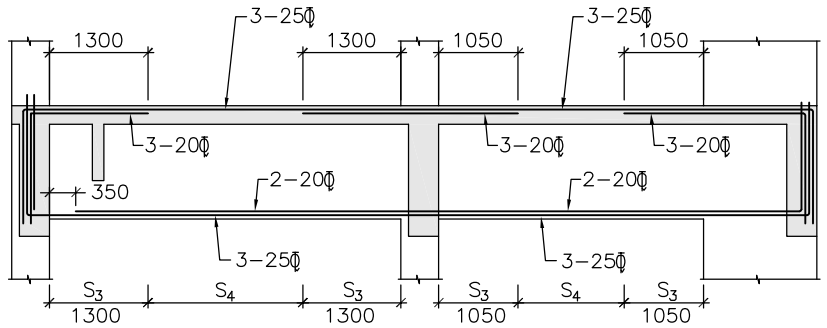

FB:01(400X650)

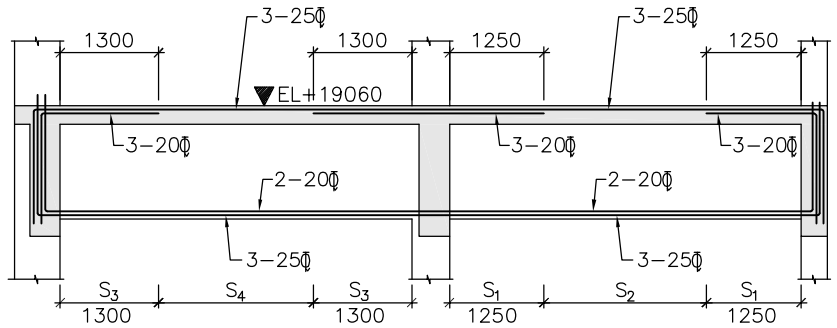

FB:02(400X650)

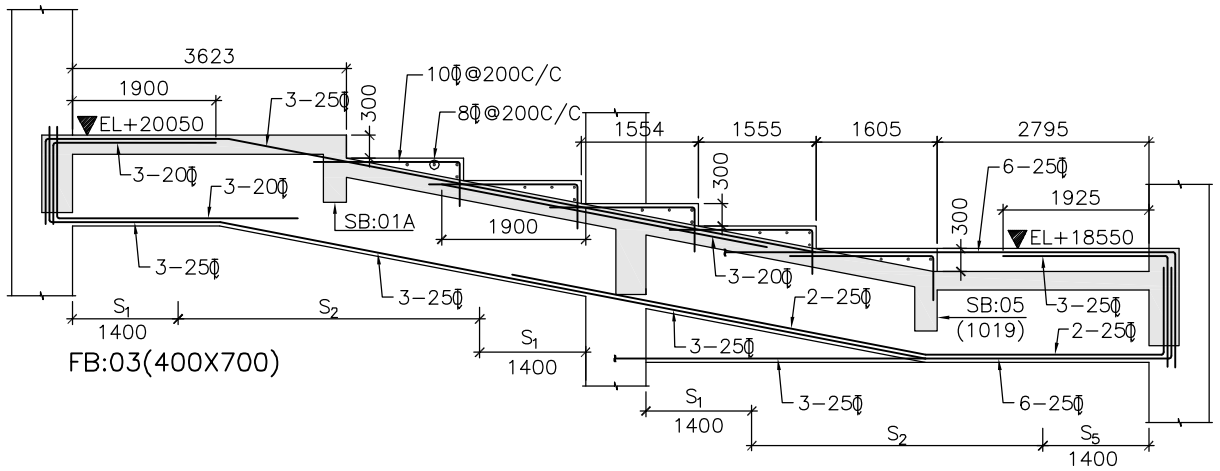

FB:03(400X700)

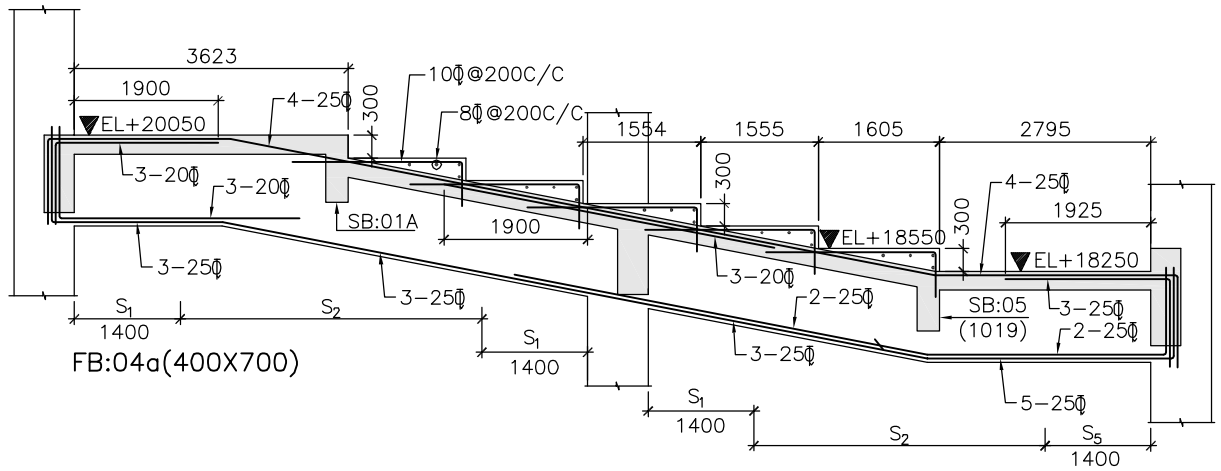

FB:04a(400X700)

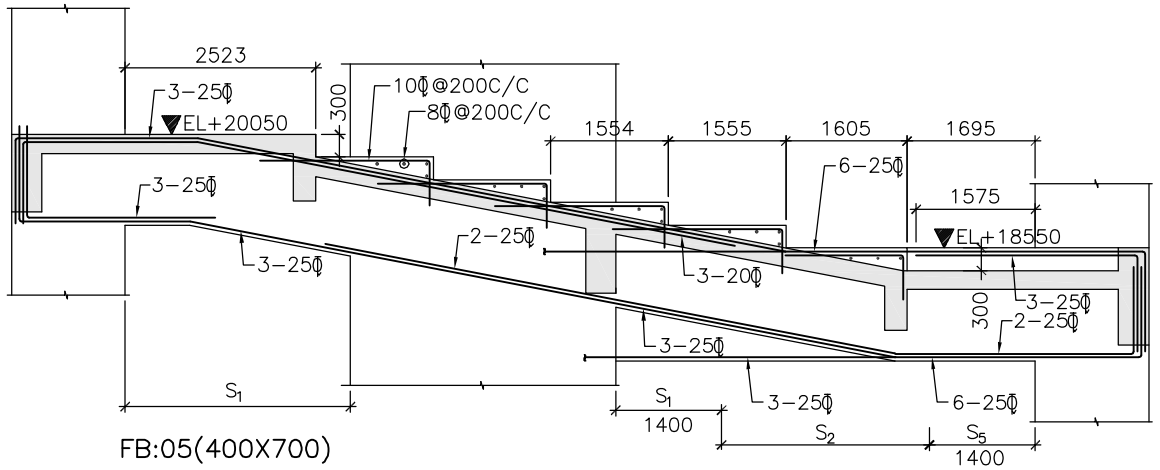

FB:05(400X700)

RELATED DRAWINGS:

1. TCE.10477A-CV-1007-RC-1001
2. TCE.10477A-CV-1007-RC-1018
3. TCE.10477A-CV-1007-RC-1019
4. TCE.10477A-CV-1007-RC-1020
5. TCE.10477A-CV-1007-RC-1027
6. TCE.10477A-CV-1007-RC-1028

LEGEND:

S_1=2L 10Φ@100C/C STP.
S_2=2L 10Φ@150C/C STP.
S_3=2L 8Φ@100C/C STP.
S_4=2L 8Φ@150C/C STP.
S_5=4L 10Φ@100C/C STP.
S_6=4L 10Φ@150C/C STP.

NOTES:

1. ALL DIMENSIONS AND LEVELS ARE IN mm U.N.O.
2. ONLY FIGURED DIMENSIONS ARE TO BE FOLLOWED, NOT TO BE MEASURED.
3. GRADE OF CONCRETE SHALL BE OF M25(1:1:2) U.N.O.
4. GRADE OF REINFORCEMENT STEEL SHALL BE OF Fe500
5. THESE DRAWINGS ARE THE PROPERTY OF M/S TATA CONSULTING ENGINEERS LIMITED. THOSE SHALL NOT BE COPIED, TRANSFERRED, MODIFIED OR USED FOR ANY PURPOSE OTHER THAN FOR THE PLANNING AND CONSTRUCTION OF "INTEGRATED COMMAND CONTROL CENTRE PROJECT AT PANJABARI, GUWAHATI"
6. DE-SHUTTERING PERIOD SHALL NOT BE LESS THAN SPECIFIED BELOW:-
   a) VERTICAL FACES OF COLUMN, BEAM & WALL : 24 HOURS
   b) SLAB (i) SPANNING UPTO 4.5m : 7 DAYS
      (ii) SPANNING OVER 4.5m : 14 DAYS
   c) BEAM (i) SPANNING UPTO 6.0m : 14 DAYS
      (ii) SPANNING OVER 6.0m : 21 DAYS
8. CLEAR COVER TO THE MAIN REINFORCEMENT
   a) FOUNDATION : 60mm
   b) COLUMN UPTO PLINTH : 60mm
   c) COLUMN ABOVE PLINTH : 40mm
   d) BEAM : 25mm
   e) WALL : 30mm
   f) SLAB : 15-20mm
9. LAP & ANCHORAGE SHALL BE OF 50 TIMES OF BAR DIA.
10. NOT MORE THAN 50% OF THE BARS SHALL BE SPLICED AT ONE SECTION
11. USE SPACE BAR TO AVOID CONGESTION, WHEREVER NECESSARY.
12. ANY DISCREPANCY NOTED SHOULD BE BROUGHT TO THE NOTICE OF THE CONSULTANT.
13. THIS DRAWING SHALL BE READ IN CONJUNCTION WITH RELEVANT ARCHITECTURAL DRAWINGS.

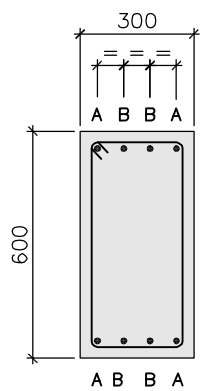

A=4-25Φ
B=4-20Φ
2L 8Φ@100C/C STP.

DETAIL OF SB-01A

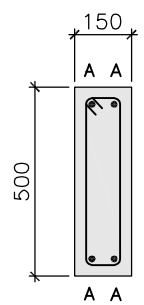

A=4-16Φ
2L 8Φ@125C/C STP.

DETAIL OF SB-02

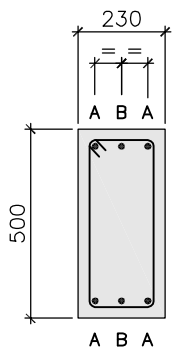

A=4-16Φ
B=2-16Φ
2L 8Φ@100C/C STP.

DETAIL OF SB-03

TENDER PURPOSE ONLY

SIGN.													
INITIALS													
REVISIONS													
SIGN.													17.04.2020
INITIALS													
ISSUE	DRN	DSN	CHD	CV	EL	IC	ME	PL	HVAC	EXT	LS	PE/PM	APPD	DATE
				CLEARED										

GUWAHATI SMART CITY LIMITED
SMART CITY MISSION GUWAHATI

DETAILS OF FOURTH FLOOR BEAM (EL+18550/+20050) L SECTION (SHEET 2 / 2)

TATA CONSULTING ENGINEERS LIMITED
MUMBAI

SCALE : AS NOTED
DC & DISC : ---
DWG NO. TCE.10477A-CV-1007-RC-1021
ISSUE R0

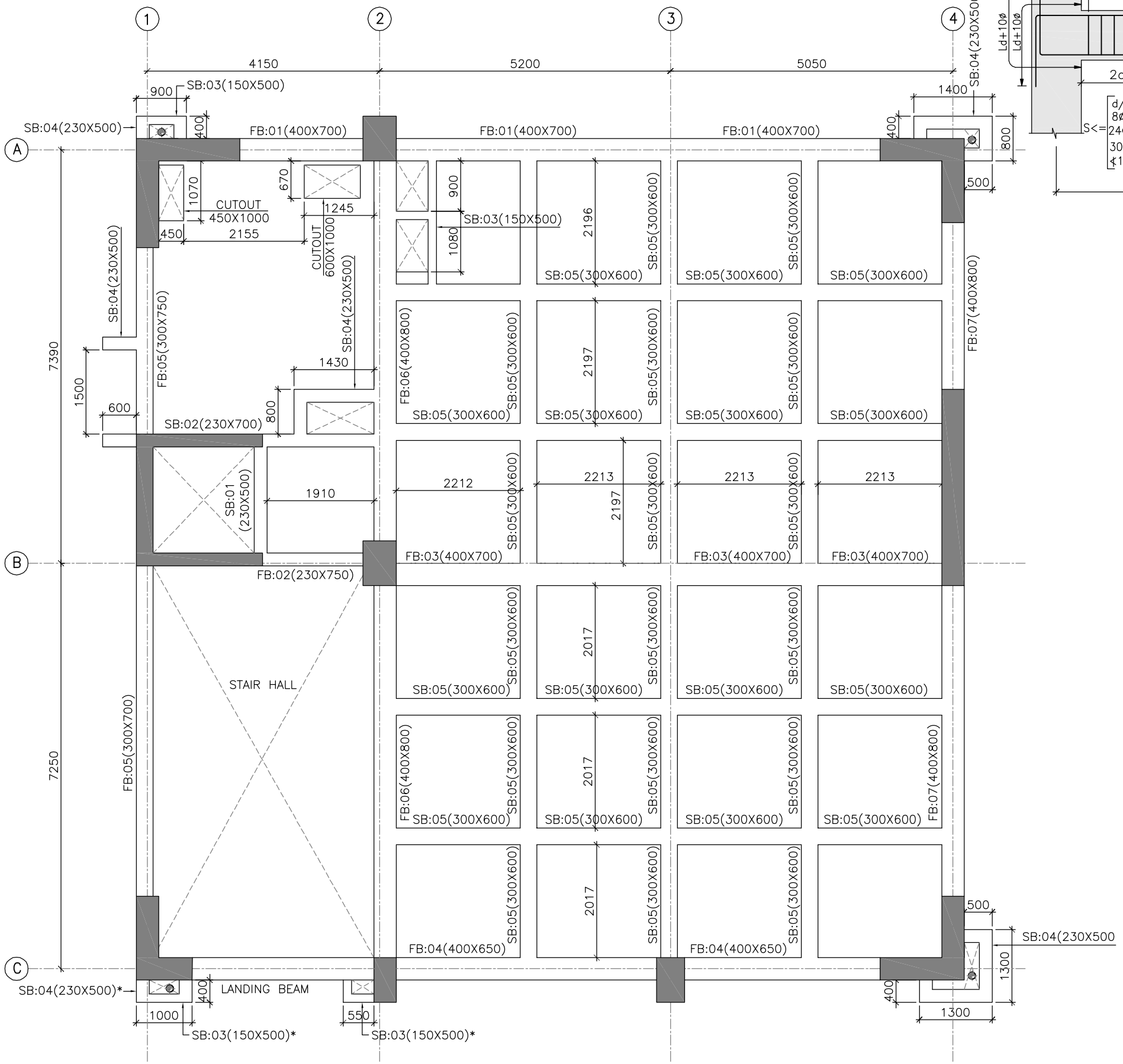

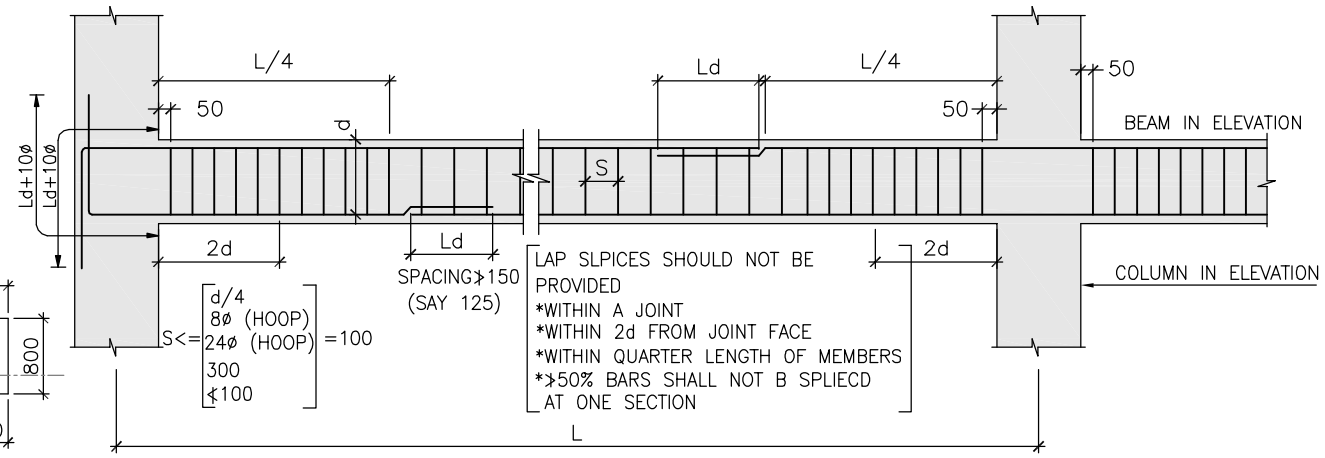

TYPICAL REINFORCEMENT DETAIL OF BEAM

NOTES:

1. ALL DIMENSIONS AND LEVELS ARE IN mm U.N.O.
2. ONLY FIGURED DIMENSIONS ARE TO BE FOLLOWED, NOT TO BE MEASURED.
3. GRADE OF CONCRETE SHALL BE OF M25(1:1:2) U.N.O.
4. GRADE OF REINFORCEMENT STEEL SHALL BE OF Fe500
5. THESE DRAWINGS ARE THE PROPERTY OF M/S TATA CONSULTING ENGINEERS LIMITED. THOSE SHALL NOT BE COPIED, TRANSFERRED, MODIFIED OR USED FOR ANY PURPOSE OTHER THAN FOR THE PLANNING AND CONSTRUCTION OF "INTEGRATED COMMAND CONTROL CENTRE PROJECT AT PANJABARI, GUWAHATI"
6. DE-SHUTTERING PERIOD SHALL NOT BE LESS THAN SPECIFIED BELOW:-
   - a) VERTICAL FACES OF COLUMN, BEAM & WALL : 24 HOURS
   - b) SLAB (i) SPANNING UPTO 4.5m : 7 DAYS
   - (ii) SPANNING OVER 4.5m : 14 DAYS
   - c) BEAM (i) SPANNING UPTO 6.0m : 14 DAYS
   - (ii) SPANNING OVER 6.0m : 21 DAYS
8. CLEAR COVER TO THE MAIN REINFORCEMENT
   - a) FOUNDATION : 60mm
   - b) COLUMN UPTO PLINTH : 60mm
   - c) COLUMN ABOVE PLINTH : 40mm
   - d) BEAM : 25mm
   - e) WALL : 30mm
   - f) SLAB : 15-20mm
9. LAP & ANCHORAGE SHALL BE OF 50 TIMES OF BAR DIA.
10. NOT MORE THAN 50% OF THE BARS SHALL BE SPLICED AT ONE SECTION
11. USE SPACE BAR TO AVOID CONGESTION, WHEREVER NECESSARY.
12. ANY DISCREPANCY NOTED SHOULD BE BROUGHT TO THE NOTICE OF THE CONSULTANT.
13. THIS DRAWING SHALL BE READ IN CONJUNCTION WITH RELEVANT ARCHITECTURAL DRAWINGS.

TENDER PURPOSE ONLY

BEAMS MARKED AS * SHALL BE PLACED AT LANDING LEVEL

RELATED DRAWINGS:

1. TCE.10477A-CV-1007-RC-1001
2. TCE.10477A-CV-1007-RC-1023
3. TCE.10477A-CV-1007-RC-1029

SIGN.														
INITIALS														
REVISIONS														
SIGN.														17.04.2020
INITIALS														
ISSUE	DRN	DSN	CHD	CV	EL	IC	ME	PL	HVAC	EXT	LS	PE/PM	APPD	DATE
				CLEARED										

GUWAHATI SMART CITY LIMITED

SMART CITY MISSION GUWAHATI

DETAILS OF ROOF BEAM
BEAM LAYOUT (SHEET 1 / 2)

TATA CONSULTING ENGINEERS LIMITED
MUMBAI

SCALE : AS NOTED
DC & DISC : ---
DWG NO. TCE.10477A-CV-1007-RC-1022
ISSUE R0

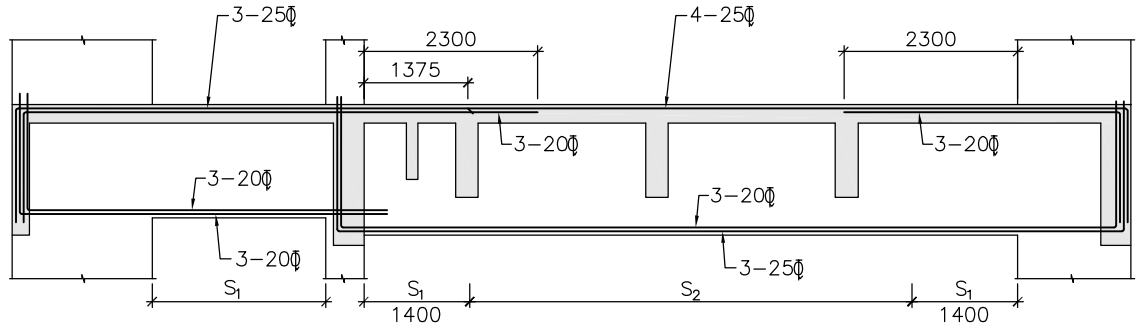

FB:01(400X650) FB:01(400X700)

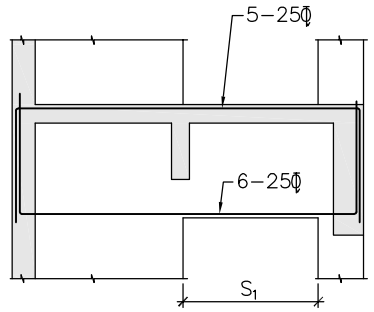

FB:02(230X750)

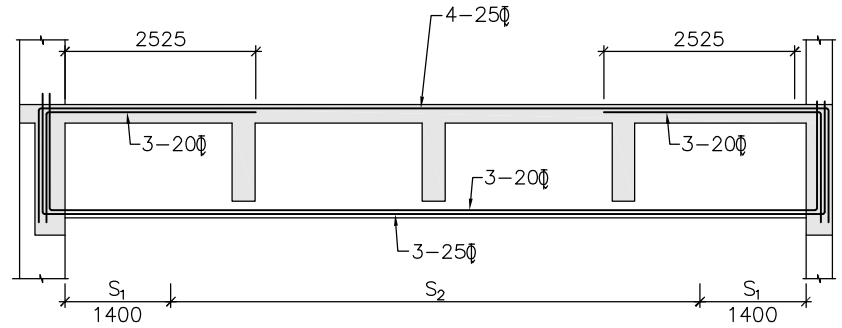

FB:03(400X700)

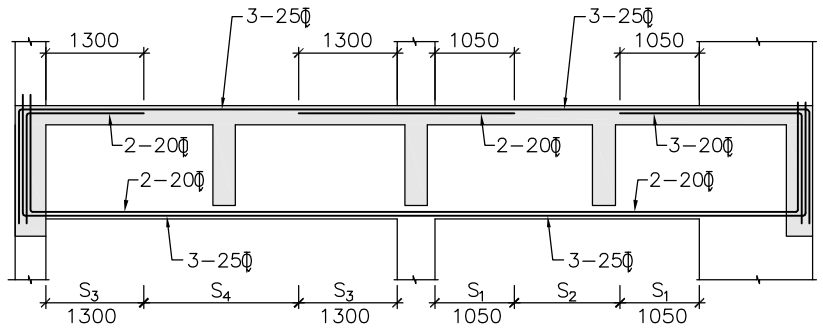

FB:04(400X650)

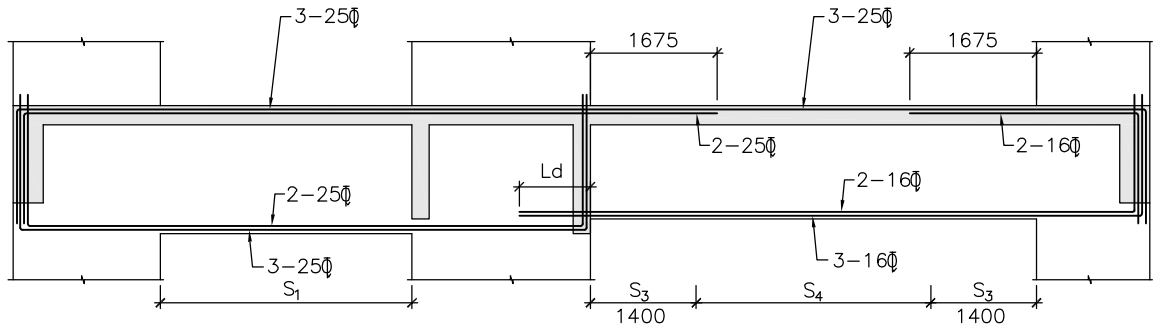

FB:05(300X750) FB:05(300X700)

RELATED DRAWINGS:

1. TCE.10477A-CV-1007-RC-1001
2. TCE.10477A-CV-1007-RC-1022
3. TCE.10477A-CV-1007-RC-1029

LEGEND:

S_1=2L 10Φ@100C/C STP.
S_2=2L 10Φ@150C/C STP.
S_3=2L 8Φ@100C/C STP.
S_4=2L 8Φ@150C/C STP.
S_5=4L 10Φ@100C/C STP.
S_6=4L 10Φ@150C/C STP.

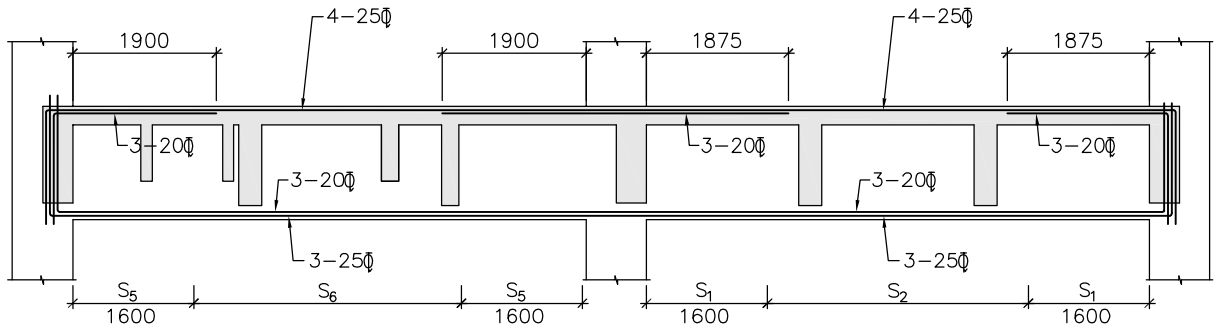

FB:06(400X800)

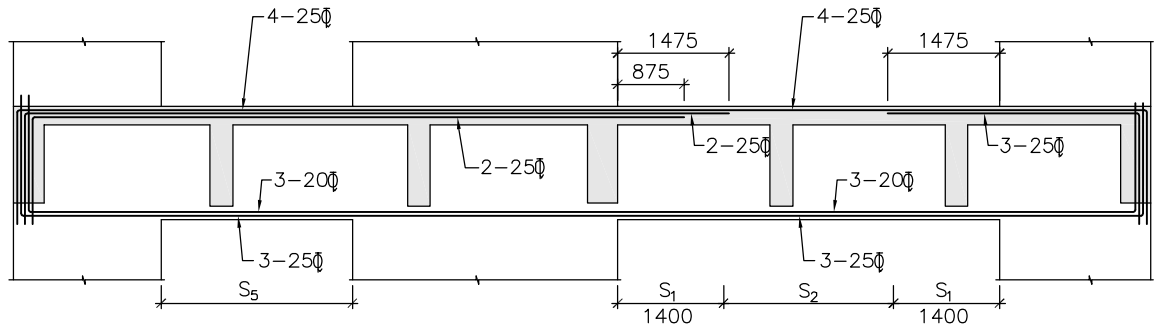

FB:07(400X800)

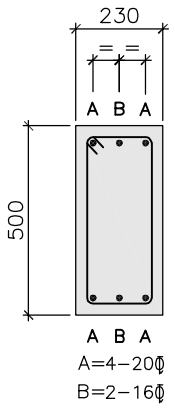

DETAIL OF SB-01

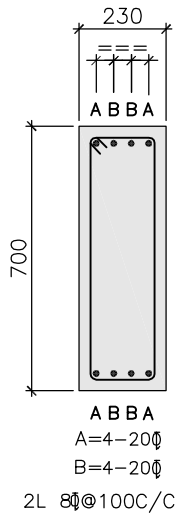

DETAIL OF SB-02

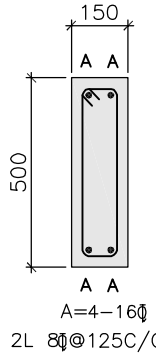

DETAIL OF SB-03

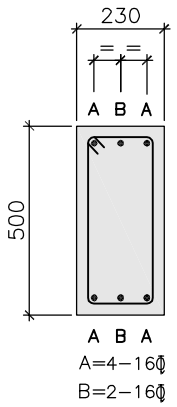

DETAIL OF SB-04

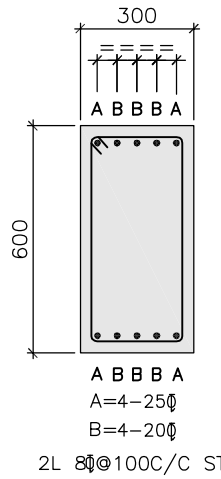

DETAIL OF SB-05

NOTES:

1. ALL DIMENSIONS AND LEVELS ARE IN mm U.N.O.
2. ONLY FIGURED DIMENSIONS ARE TO BE FOLLOWED, NOT TO BE MEASURED.
3. GRADE OF CONCRETE SHALL BE OF M25(1:1:2) U.N.O.
4. GRADE OF REINFORCEMENT STEEL SHALL BE OF Fe500
5. THESE DRAWINGS ARE THE PROPERTY OF M/S TATA CONSULTING ENGINEERS LIMITED. THOSE SHALL NOT BE COPIED, TRANSFERRED, MODIFIED OR USED FOR ANY PURPOSE OTHER THAN FOR THE PLANNING AND CONSTRUCTION OF "INTEGRATED COMMAND CONTROL CENTRE PROJECT AT PANJABARI, GUWAHATI"
6. DE-SHUTTERING PERIOD SHALL NOT BE LESS THAN SPECIFIED BELOW:-
   a) VERTICAL FACES OF COLUMN, BEAM & WALL : 24 HOURS
   b) SLAB (i) SPANNING UPTO 4.5m : 7 DAYS
      (ii) SPANNING OVER 4.5m : 14 DAYS
   c) BEAM (i) SPANNING UPTO 6.0m : 14 DAYS
      (ii) SPANNING OVER 6.0m : 21 DAYS
8. CLEAR COVER TO THE MAIN REINFORCEMENT
   a) FOUNDATION : 60mm
   b) COLUMN UPTO PLINTH : 60mm
   c) COLUMN ABOVE PLINTH : 40mm
   d) BEAM : 25mm
   e) WALL : 30mm
   f) SLAB : 15-20mm
9. LAP & ANCHORAGE SHALL BE OF 50 TIMES OF BAR DIA.
10. NOT MORE THAN 50% OF THE BARS SHALL BE SPLICED AT ONE SECTION
11. USE SPACE BAR TO AVOID CONGESTION, WHEREVER NECESSARY.
12. ANY DISCREPANCY NOTED SHOULD BE BROUGHT TO THE NOTICE OF THE CONSULTANT.
13. THIS DRAWING SHALL BE READ IN CONJUNCTION WITH RELEVANT ARCHITECTURAL DRAWINGS.

TENDER PURPOSE ONLY

SIGN.													
INITIALS													
REVISIONS													
SIGN.													17.04.2020
INITIALS													
ISSUE	DRN	DSN	CHD	CV	EL	IC	ME	PL	HVAC	EXT	LS	PE/PM	APPD	DATE
				CLEARED									

GUWAHATI SMART CITY LIMITED
SMART CITY MISSION GUWAHATI

DETAILS OF ROOF BEAM
L SECTION (SHEET 2 / 2)

TATA CONSULTING ENGINEERS LIMITED
MUMBAI

SCALE : AS NOTED
DC & DISC: ---
DWG NO. TCE.10477A-CV-1007-RC-1023
ISSUE R0

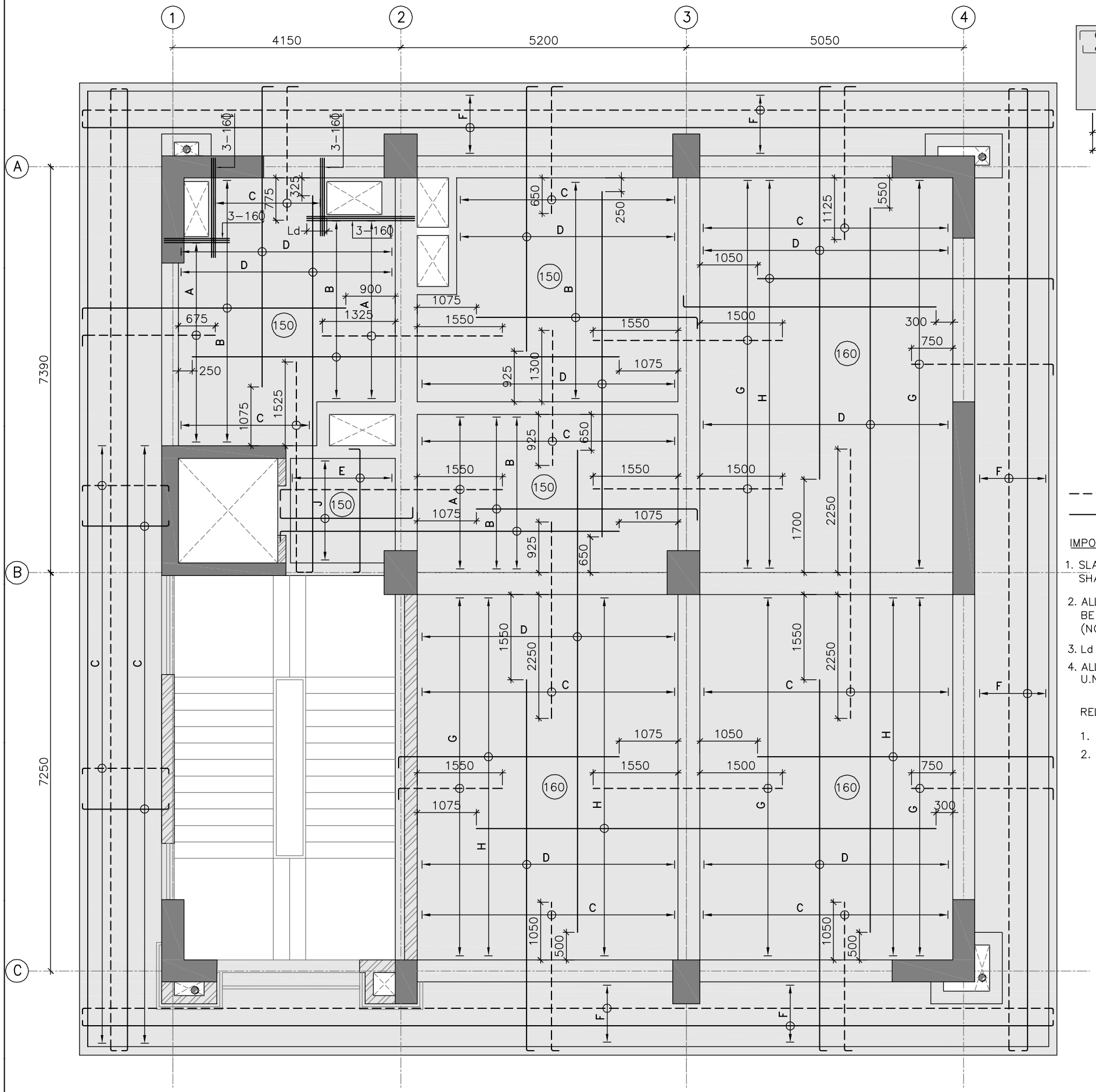

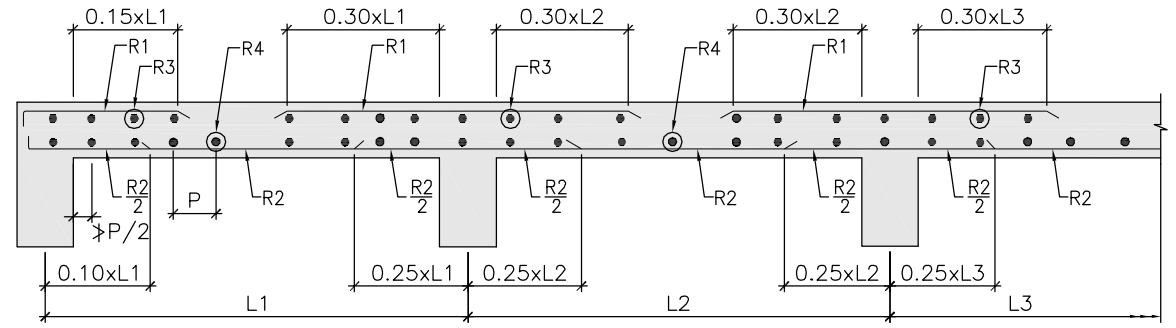

TYPICAL SECTION OF SLAB REINFORCEMENT

LEGEND:

A=10Φ@125C/C
B=10Φ@250C/C
C=10Φ@150C/C
D=10Φ@300C/C
E=8Φ@300C/C
F=8Φ@150C/C
G=10Φ@100C/C
H=10Φ@200C/C
J=8Φ@250C/C

- - - - - - - TOP REINFORCEMENT
——————— BOTTOM REINFORCEMENT

IMPOTANT NOTES:

1. SLAB REINFORCEMENT, WHEREVER NOT SHOWN SHALL BE OF 8ø@150C/C
2. ALL DISTRIBUTION REINFORCEMENT SHALL BE OF 8ø@150C/C WHEREVER REQUIRED (NOT SHOWN IN THE PLAN)
3. Ld = DEVELOPMENT LENGTH = 50ø
4. ALL SLAB THICKNESS SHALL BE OF 150mm U.N.O.

RELATED DRAWINGS:

1. TCE.10477A-CV-1007-RC-1001
2. TCE.10477A-CV-1007-RC-1012

NOTES:

1. ALL DIMENSIONS AND LEVELS ARE IN mm U.N.O.
2. ONLY FIGURED DIMENSIONS ARE TO BE FOLLOWED, NOT TO BE MEASURED.
3. GRADE OF CONCRETE SHALL BE OF M25(1:1:2) U.N.O.
4. GRADE OF REINFORCEMENT STEEL SHALL BE OF Fe500
5. THESE DRAWINGS ARE THE PROPERTY OF M/S TATA CONSULTING ENGINEERS LIMITED. THOSE SHALL NOT BE COPIED, TRANSFERRED, MODIFIED OR USED FOR ANY PURPOSE OTHER THAN FOR THE PLANNING AND CONSTRUCTION OF "INTEGRATED COMMAND CONTROL CENTRE PROJECT AT PANJABARI, GUWAHATI"
6. DE-SHUTTERING PERIOD SHALL NOT BE LESS THAN SPECIFIED BELOW:-

a) VERTICAL FACES OF COLUMN, BEAM & WALL			:	24 HOURS
b) SLAB	(i)	SPANNING UPTO 4.5m	:	7 DAYS
	(ii)	SPANNING OVER 4.5m	:	14 DAYS
c) BEAM	(i)	SPANNING UPTO 6.0m	:	14 DAYS
	(ii)	SPANNING OVER 6.0m	:	21 DAYS

8. CLEAR COVER TO THE MAIN REINFORCEMENT

a) FOUNDATION	:	60mm
b) COLUMN UPTO PLINTH	:	60mm
c) COLUMN ABOVE PLINTH	:	40mm
d) BEAM	:	25mm
e) WALL	:	30mm
f) SLAB	:	15-20mm

9. LAP & ANCHORAGE SHALL BE OF 50 TIMES OF BAR DIA.
10. NOT MORE THAN 50% OF THE BARS SHALL BE SPLICED AT ONE SECTION
11. USE SPACE BAR TO AVOID CONGESTION, WHEREVER NECESSARY.
12. ANY DISCREPANCY NOTED SHOULD BE BROUGHT TO THE NOTICE OF THE CONSULTANT.
13. THIS DRAWING SHALL BE READ IN CONJUNCTION WITH RELEVANT ARCHITECTURAL DRAWINGS.

TENDER PURPOSE ONLY

SIGN.													
INITIALS													
REVISIONS													
SIGN.													17.04.2020
INITIALS													
ISSUE	DRN	DSN	CHD	CV	EL	IC	ME	PL	HVAC	EXT	LS	PE/PM	APPD	DATE
				CLEARED									

GUWAHATI SMART CITY LIMITED
SMART CITY MISSION GUWAHATI

DETAILS OF FIRST FLOOR SLAB

TATA CONSULTING ENGINEERS LIMITED
MUMBAI

SCALE : AS NOTED DC & DISC: ---	DWG NO. TCE.10477A-CV-1007-RC-1024		ISSUE R0

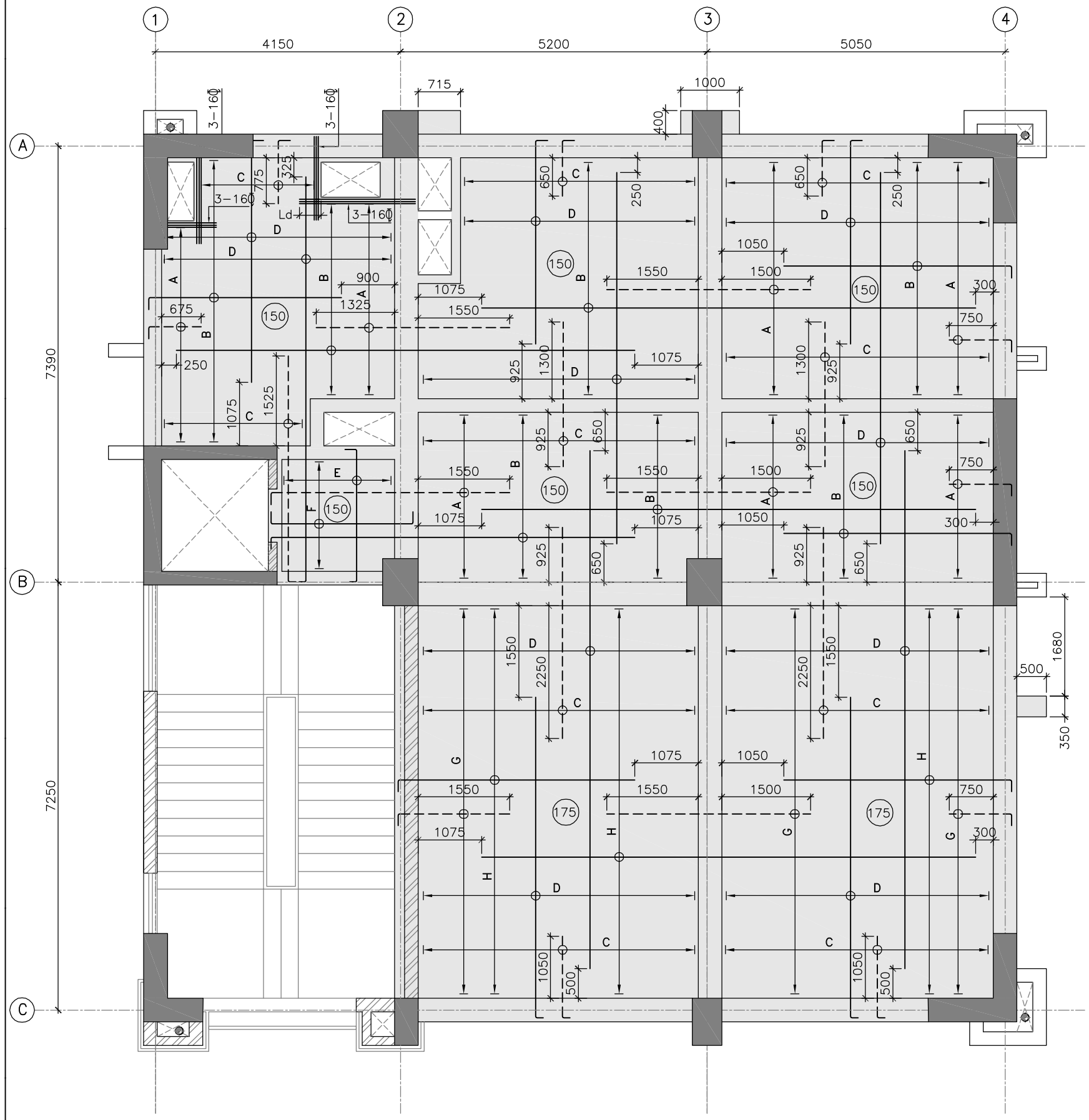

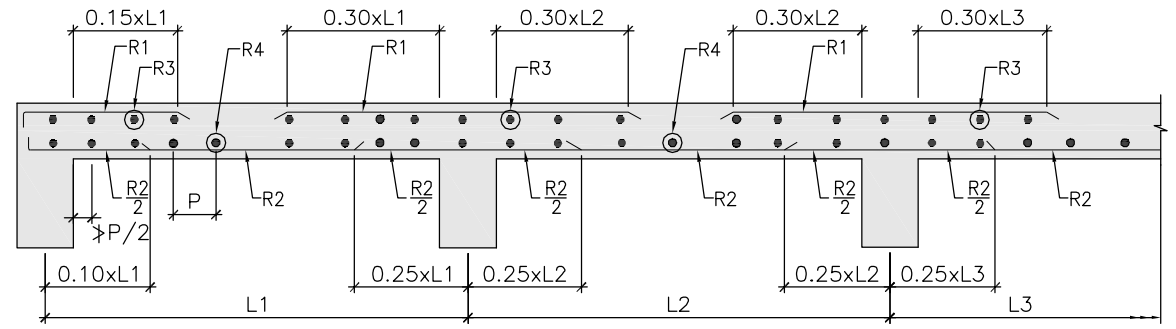

TYPICAL SECTION OF SLAB REINFORCEMENT

LEGEND:

A=10ϕ@125C/C
B=10ϕ@250C/C
C=10ϕ@150C/C
D=10ϕ@300C/C
E=8ϕ@300C/C
F=8ϕ@250C/C
G=12ϕ@100C/C
H=12ϕ@200C/C

TOP REINFORCEMENT
BOTTOM REINFORCEMENT

IMPOTANT NOTES:

1. SLAB REINFORCEMENT, WHEREVER NOT SHOWN SHALL BE OF 8ø@150C/C
2. ALL DISTRIBUTION REINFORCEMENT SHALL BE OF 8ø@150C/C WHEREVER REQUIRED (NOT SHOWN IN THE PLAN)
3. Ld = DEVELOPMENT LENGTH = 50ø
4. ALL SLAB THICKNESS SHALL BE OF 150mm U.N.O.

RELATED DRAWINGS:

1. TCE.10477A-CV-1007-RC-1001
2. TCE.10477A-CV-1007-RC-1014

NOTES:

1. ALL DIMENSIONS AND LEVELS ARE IN mm U.N.O.
2. ONLY FIGURED DIMENSIONS ARE TO BE FOLLOWED, NOT TO BE MEASURED.
3. GRADE OF CONCRETE SHALL BE OF M25(1:1:2) U.N.O.
4. GRADE OF REINFORCEMENT STEEL SHALL BE OF Fe500
5. THESE DRAWINGS ARE THE PROPERTY OF M/S TATA CONSULTING ENGINEERS LIMITED. THOSE SHALL NOT BE COPIED, TRANSFERRED, MODIFIED OR USED FOR ANY PURPOSE OTHER THAN FOR THE PLANNING AND CONSTRUCTION OF "INTEGRATED COMMAND CONTROL CENTRE PROJECT AT PANJABARI, GUWAHATI"
6. DE-SHUTTERING PERIOD SHALL NOT BE LESS THAN SPECIFIED BELOW:-

a) VERTICAL FACES OF COLUMN, BEAM & WALL			:	24 HOURS
b) SLAB	(i)	SPANNING UPTO 4.5m	:	7 DAYS
	(ii)	SPANNING OVER 4.5m	:	14 DAYS
c) BEAM	(i)	SPANNING UPTO 6.0m	:	14 DAYS
	(ii)	SPANNING OVER 6.0m	:	21 DAYS

8. CLEAR COVER TO THE MAIN REINFORCEMENT

a) FOUNDATION	:	60mm
b) COLUMN UPTO PLINTH	:	60mm
c) COLUMN ABOVE PLINTH	:	40mm
d) BEAM	:	25mm
e) WALL	:	30mm
f) SLAB	:	15-20mm

9. LAP & ANCHORAGE SHALL BE OF 50 TIMES OF BAR DIA.
10. NOT MORE THAN 50% OF THE BARS SHALL BE SPLICED AT ONE SECTION
11. USE SPACE BAR TO AVOID CONGESTION, WHEREVER NECESSARY.
12. ANY DISCREPANCY NOTED SHOULD BE BROUGHT TO THE NOTICE OF THE CONSULTANT.
13. THIS DRAWING SHALL BE READ IN CONJUNCTION WITH RELEVANT ARCHITECTURAL DRAWINGS.

TENDER PURPOSE ONLY

SIGN.													
INITIALS													
REVISIONS													
SIGN.													17.04.2020
INITIALS													
ISSUE	DRN	DSN	CHD	CV	EL	IC	ME	PL	HVAC	EXT	LS	PE/PM	APPD	DATE
				CLEARED									

GUWAHATI SMART CITY LIMITED
SMART CITY MISSION GUWAHATI

DETAILS OF SECOND FLOOR SLAB

TATA CONSULTING ENGINEERS LIMITED
MUMBAI

SCALE : AS NOTED
DC & DISC : ---
DWG NO. TCE.10477A-CV-1007-RC-1025
ISSUE R0

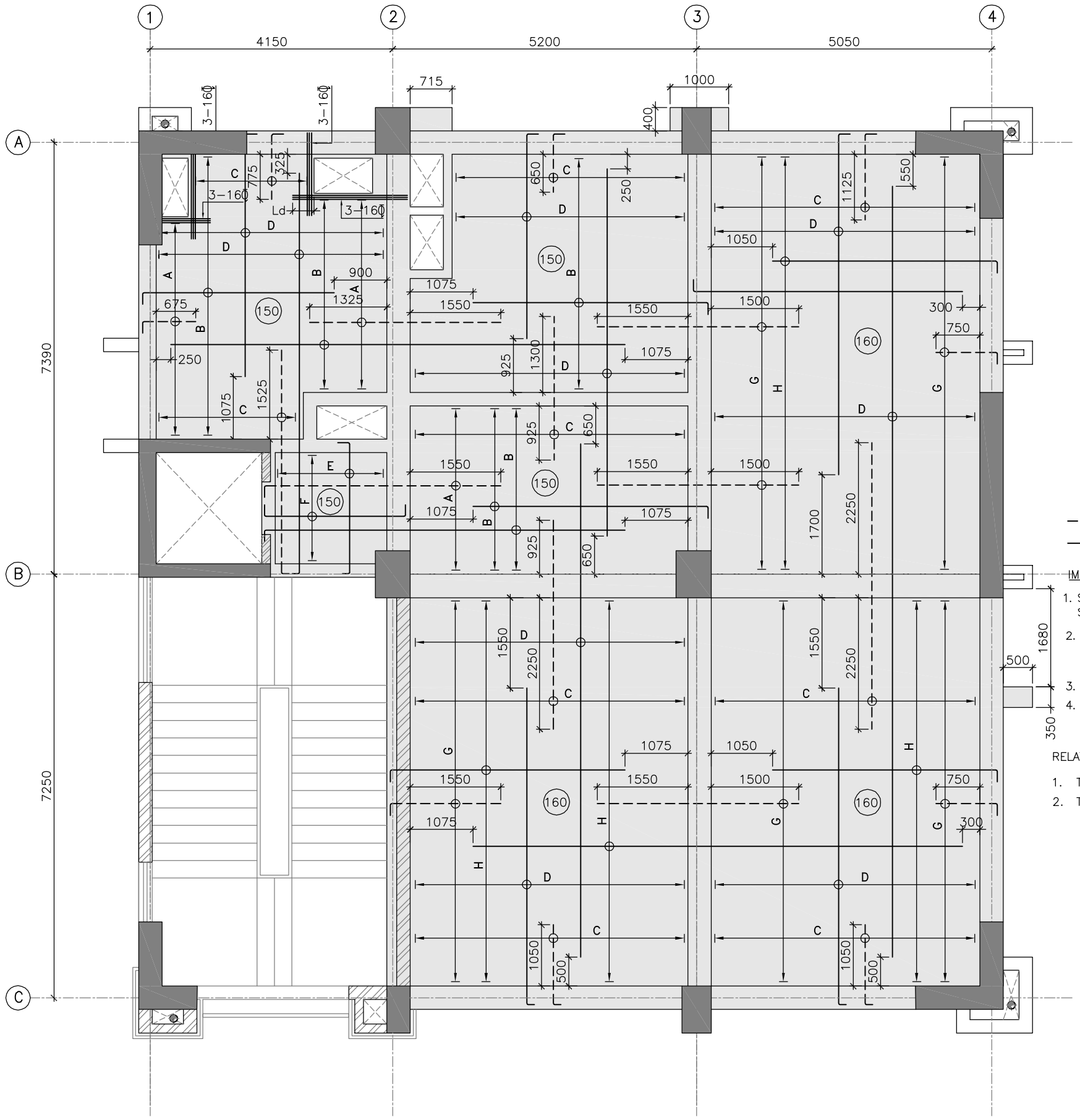

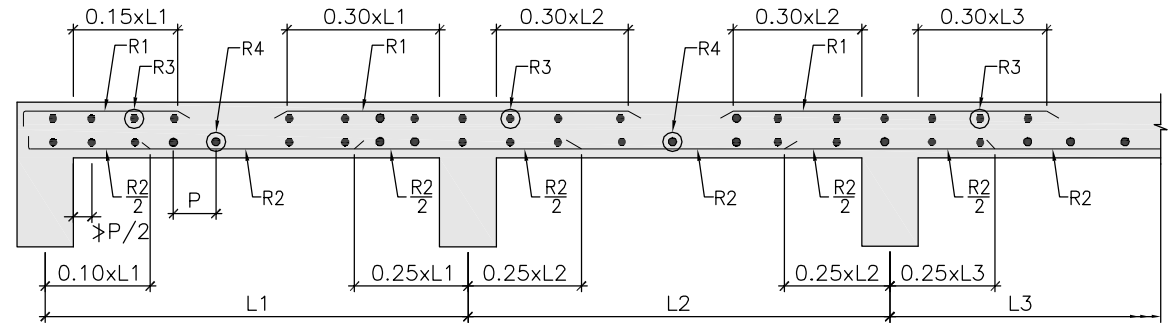

TYPICAL SECTION OF SLAB REINFORCEMENT

LEGEND:

A=10Φ@125C/C
B=10Φ@250C/C
C=10Φ@150C/C
D=10Φ@300C/C
E=8Φ@300C/C
F=8Φ@250C/C
G=12Φ@100C/C
H=12Φ@200C/C

TOP REINFORCEMENT
BOTTOM REINFORCEMENT

IMPOTANT NOTES:

1. SLAB REINFORCEMENT, WHEREVER NOT SHOWN SHALL BE OF 8ø@150C/C
2. ALL DISTRIBUTION REINFORCEMENT SHALL BE OF 8ø@150C/C WHEREVER REQUIRED (NOT SHOWN IN THE PLAN)
3. Ld = DEVELOPMENT LENGTH = 50ø
4. ALL SLAB THICKNESS SHALL BE OF 150mm U.N.O.

RELATED DRAWINGS:

1. TCE.10477A-CV-1007-RC-1001
2. TCE.10477A-CV-1007-RC-1016

NOTES:

1. ALL DIMENSIONS AND LEVELS ARE IN mm U.N.O.
2. ONLY FIGURED DIMENSIONS ARE TO BE FOLLOWED, NOT TO BE MEASURED.
3. GRADE OF CONCRETE SHALL BE OF M25(1:1:2) U.N.O.
4. GRADE OF REINFORCEMENT STEEL SHALL BE OF Fe500
5. THESE DRAWINGS ARE THE PROPERTY OF M/S TATA CONSULTING ENGINEERS LIMITED. THOSE SHALL NOT BE COPIED, TRANSFERRED, MODIFIED OR USED FOR ANY PURPOSE OTHER THAN FOR THE PLANNING AND CONSTRUCTION OF "INTEGRATED COMMAND CONTROL CENTRE PROJECT AT PANJABARI, GUWAHATI"
6. DE-SHUTTERING PERIOD SHALL NOT BE LESS THAN SPECIFIED BELOW:-

a) VERTICAL FACES OF COLUMN, BEAM & WALL			:	24 HOURS
b) SLAB	(i)	SPANNING UPTO 4.5m	:	7 DAYS
	(ii)	SPANNING OVER 4.5m	:	14 DAYS
c) BEAM	(i)	SPANNING UPTO 6.0m	:	14 DAYS
	(ii)	SPANNING OVER 6.0m	:	21 DAYS

8. CLEAR COVER TO THE MAIN REINFORCEMENT

a) FOUNDATION	:	60mm
b) COLUMN UPTO PLINTH	:	60mm
c) COLUMN ABOVE PLINTH	:	40mm
d) BEAM	:	25mm
e) WALL	:	30mm
f) SLAB	:	15-20mm

9. LAP & ANCHORAGE SHALL BE OF 50 TIMES OF BAR DIA.
10. NOT MORE THAN 50% OF THE BARS SHALL BE SPLICED AT ONE SECTION
11. USE SPACE BAR TO AVOID CONGESTION, WHEREVER NECESSARY.
12. ANY DISCREPANCY NOTED SHOULD BE BROUGHT TO THE NOTICE OF THE CONSULTANT.
13. THIS DRAWING SHALL BE READ IN CONJUNCTION WITH RELEVANT ARCHITECTURAL DRAWINGS.

TENDER PURPOSE ONLY

SIGN.													
INITIALS													
REVISIONS													
SIGN.													17.04.2020
INITIALS													
ISSUE	DRN	DSN	CHD	CV	EL	IC	ME	PL	HVAC	EXT	LS	PE/PM	APPD	DATE
				CLEARED									

GUWAHATI SMART CITY LIMITED
SMART CITY MISSION GUWAHATI

DETAILS OF THIRD FLOOR SLAB

TATA CONSULTING ENGINEERS LIMITED
MUMBAI

SCALE : AS NOTED
DC & DISC : ---
DWG NO. TCE.10477A-CV-1007-RC-1026
ISSUE R0

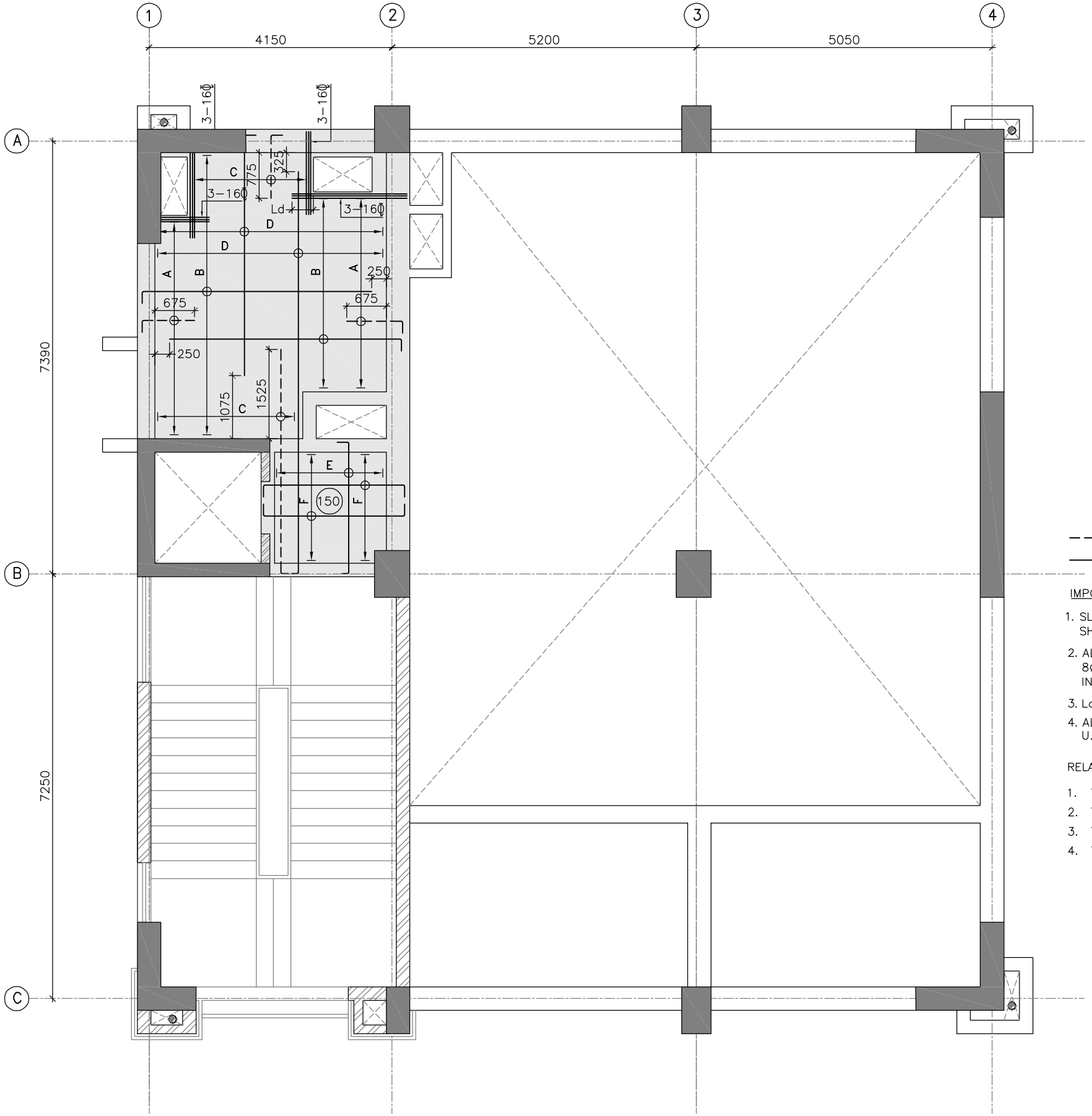

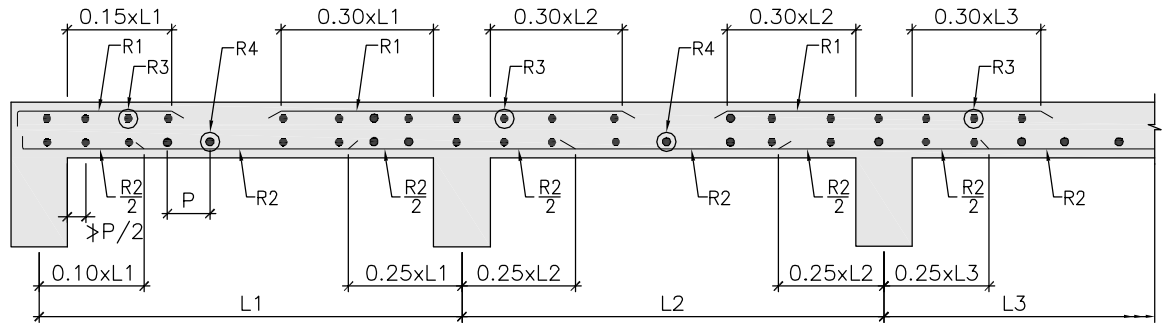

TYPICAL SECTION OF SLAB REINFORCEMENT

LEGEND:

A=10Φ@125C/C
B=10Φ@250C/C
C=10Φ@150C/C
D=10Φ@300C/C
E=8Φ@300C/C
F=8Φ@150C/C

- - - - - - - TOP REINFORCEMENT
——————— BOTTOM REINFORCEMENT

IMPOTANT NOTES:

1. SLAB REINFORCEMENT, WHEREVER NOT SHOWN SHALL BE OF 8ø@150C/C
2. ALL DISTRIBUTION REINFORCEMENT SHALL BE OF 8ø@150C/C WHEREVER REQUIRED (NOT SHOWN IN THE PLAN)
3. Ld = DEVELOPMENT LENGTH = 50ø
4. ALL SLAB THICKNESS SHALL BE OF 150mm U.N.O.

RELATED DRAWINGS:

1. TCE.10477A-CV-1007-RC-1001
2. TCE.10477A-CV-1007-RC-1018
3. TCE.10477A-CV-1007-RC-1020
4. TCE.10477A-CV-1007-RC-1028

NOTES:

1. ALL DIMENSIONS AND LEVELS ARE IN mm U.N.O.
2. ONLY FIGURED DIMENSIONS ARE TO BE FOLLOWED, NOT TO BE MEASURED.
3. GRADE OF CONCRETE SHALL BE OF M25(1:1:2) U.N.O.
4. GRADE OF REINFORCEMENT STEEL SHALL BE OF Fe500
5. THESE DRAWINGS ARE THE PROPERTY OF M/S TATA CONSULTING ENGINEERS LIMITED. THOSE SHALL NOT BE COPIED, TRANSFERRED, MODIFIED OR USED FOR ANY PURPOSE OTHER THAN FOR THE PLANNING AND CONSTRUCTION OF "INTEGRATED COMMAND CONTROL CENTRE PROJECT AT PANJABARI, GUWAHATI"
6. DE-SHUTTERING PERIOD SHALL NOT BE LESS THAN SPECIFIED BELOW:-

a) VERTICAL FACES OF COLUMN, BEAM & WALL			:	24 HOURS
b) SLAB	(i)	SPANNING UPTO 4.5m	:	7 DAYS
	(ii)	SPANNING OVER 4.5m	:	14 DAYS
c) BEAM	(i)	SPANNING UPTO 6.0m	:	14 DAYS
	(ii)	SPANNING OVER 6.0m	:	21 DAYS

8. CLEAR COVER TO THE MAIN REINFORCEMENT

a) FOUNDATION	:	60mm
b) COLUMN UPTO PLINTH	:	60mm
c) COLUMN ABOVE PLINTH	:	40mm
d) BEAM	:	25mm
e) WALL	:	30mm
f) SLAB	:	15-20mm

9. LAP & ANCHORAGE SHALL BE OF 50 TIMES OF BAR DIA.
10. NOT MORE THAN 50% OF THE BARS SHALL BE SPLICED AT ONE SECTION
11. USE SPACE BAR TO AVOID CONGESTION, WHEREVER NECESSARY.
12. ANY DISCREPANCY NOTED SHOULD BE BROUGHT TO THE NOTICE OF THE CONSULTANT.
13. THIS DRAWING SHALL BE READ IN CONJUNCTION WITH RELEVANT ARCHITECTURAL DRAWINGS.

TENDER PURPOSE ONLY

SIGN.													
INITIALS													
REVISIONS													
SIGN.													17.04.2020
INITIALS													
ISSUE	DRN	DSN	CHD	CV	EL	IC	ME	PL	HVAC	EXT	LS	PE/PM	APPD	DATE
				CLEARED									

GUWAHATI SMART CITY LIMITED
SMART CITY MISSION GUWAHATI

DETAILS OF FOURTH FLOOR SLAB (EL=18550)

TATA CONSULTING ENGINEERS LIMITED
MUMBAI

SCALE : AS NOTED
DC & DISC : ---
DWG NO. TCE.10477A-CV-1007-RC-1027
ISSUE R0

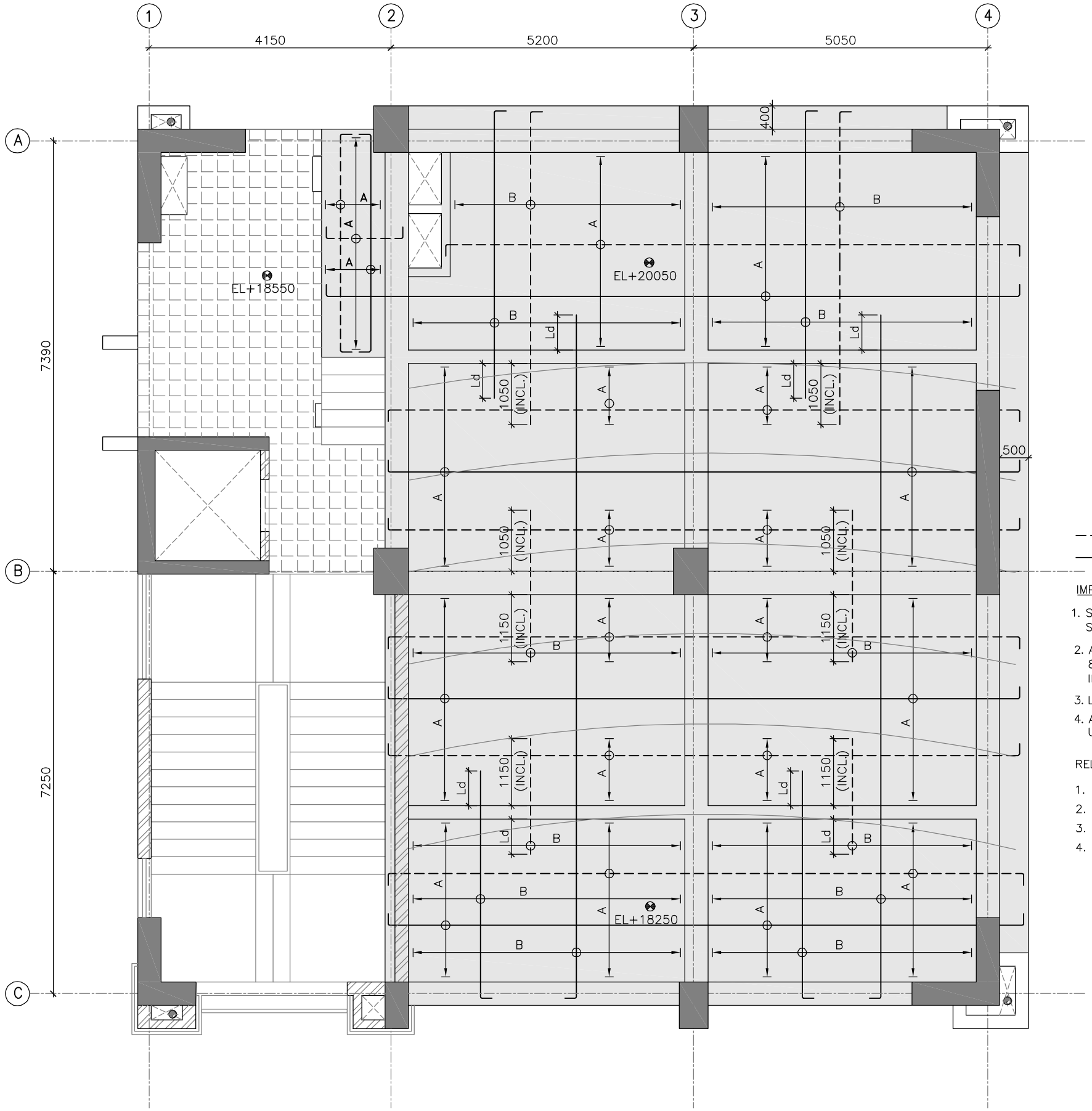

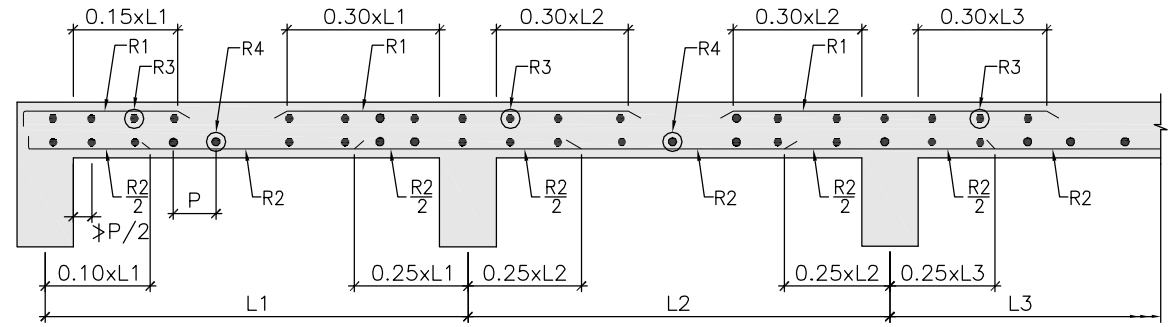

TYPICAL SECTION OF SLAB REINFORCEMENT

LEGEND:

A=10Φ@150C/C
B=12Φ@100C/C

TOP REINFORCEMENT
BOTTOM REINFORCEMENT

IMPOTANT NOTES:

1. SLAB REINFORCEMENT, WHEREVER NOT SHOWN SHALL BE OF 8Ø@150C/C
2. ALL DISTRIBUTION REINFORCEMENT SHALL BE OF 8Ø@150C/C WHEREVER REQUIRED (NOT SHOWN IN THE PLAN)
3. Ld = DEVELOPMENT LENGTH = 50Ø
4. ALL SLAB THICKNESS SHALL BE OF 150mm U.N.O.

RELATED DRAWINGS:

1. TCE.10477A–CV–1007–RC–1001
2. TCE.10477A–CV–1007–RC–1018
3. TCE.10477A–CV–1007–RC–1020
4. TCE.10477A–CV–1007–RC–1027

NOTES:

1. ALL DIMENSIONS AND LEVELS ARE IN mm U.N.O.
2. ONLY FIGURED DIMENSIONS ARE TO BE FOLLOWED, NOT TO BE MEASURED.
3. GRADE OF CONCRETE SHALL BE OF M25(1:1:2) U.N.O.
4. GRADE OF REINFORCEMENT STEEL SHALL BE OF Fe500
5. THESE DRAWINGS ARE THE PROPERTY OF M/S TATA CONSULTING ENGINEERS LIMITED. THOSE SHALL NOT BE COPIED, TRANSFERRED, MODIFIED OR USED FOR ANY PURPOSE OTHER THAN FOR THE PLANNING AND CONSTRUCTION OF "INTEGRATED COMMAND CONTROL CENTRE PROJECT AT PANJABARI, GUWAHATI"
6. DE–SHUTTERING PERIOD SHALL NOT BE LESS THAN SPECIFIED BELOW: –

a) VERTICAL FACES OF COLUMN, BEAM & WALL			:	24 HOURS
b) SLAB	(i)	SPANNING UPTO 4.5m	:	7 DAYS
	(ii)	SPANNING OVER 4.5m	:	14 DAYS
c) BEAM	(i)	SPANNING UPTO 6.0m	:	14 DAYS
	(ii)	SPANNING OVER 6.0m	:	21 DAYS

8. CLEAR COVER TO THE MAIN REINFORCEMENT

a) FOUNDATION	:	60mm
b) COLUMN UPTO PLINTH	:	60mm
c) COLUMN ABOVE PLINTH	:	40mm
d) BEAM	:	25mm
e) WALL	:	30mm
f) SLAB	:	15–20mm

9. LAP & ANCHORAGE SHALL BE OF 50 TIMES OF BAR DIA.
10. NOT MORE THAN 50% OF THE BARS SHALL BE SPLICED AT ONE SECTION
11. USE SPACE BAR TO AVOID CONGESTION, WHEREVER NECESSARY.
12. ANY DISCREPANCY NOTED SHOULD BE BROUGHT TO THE NOTICE OF THE CONSULTANT.
13. THIS DRAWING SHALL BE READ IN CONJUNCTION WITH RELEVANT ARCHITECTURAL DRAWINGS.

TENDER PURPOSE ONLY

SIGN.													
INITIALS													
REVISIONS													
SIGN.													17.04.2020
INITIALS													
ISSUE	DRN	DSN	CHD	CV	EL	IC	ME	PL	HVAC	EXT	LS	PE/PM	APPD	DATE
				CLEARED									

GUWAHATI SMART CITY LIMITED
SMART CITY MISSION GUWAHATI

DETAILS OF FOURTH FLOOR SLAB (EL+18550/+20050)

TATA CONSULTING ENGINEERS LIMITED
MUMBAI

SCALE : AS NOTED
DC & DISC : ---
DWG NO. TCE.10477A–CV–1007–RC–1028
ISSUE R0

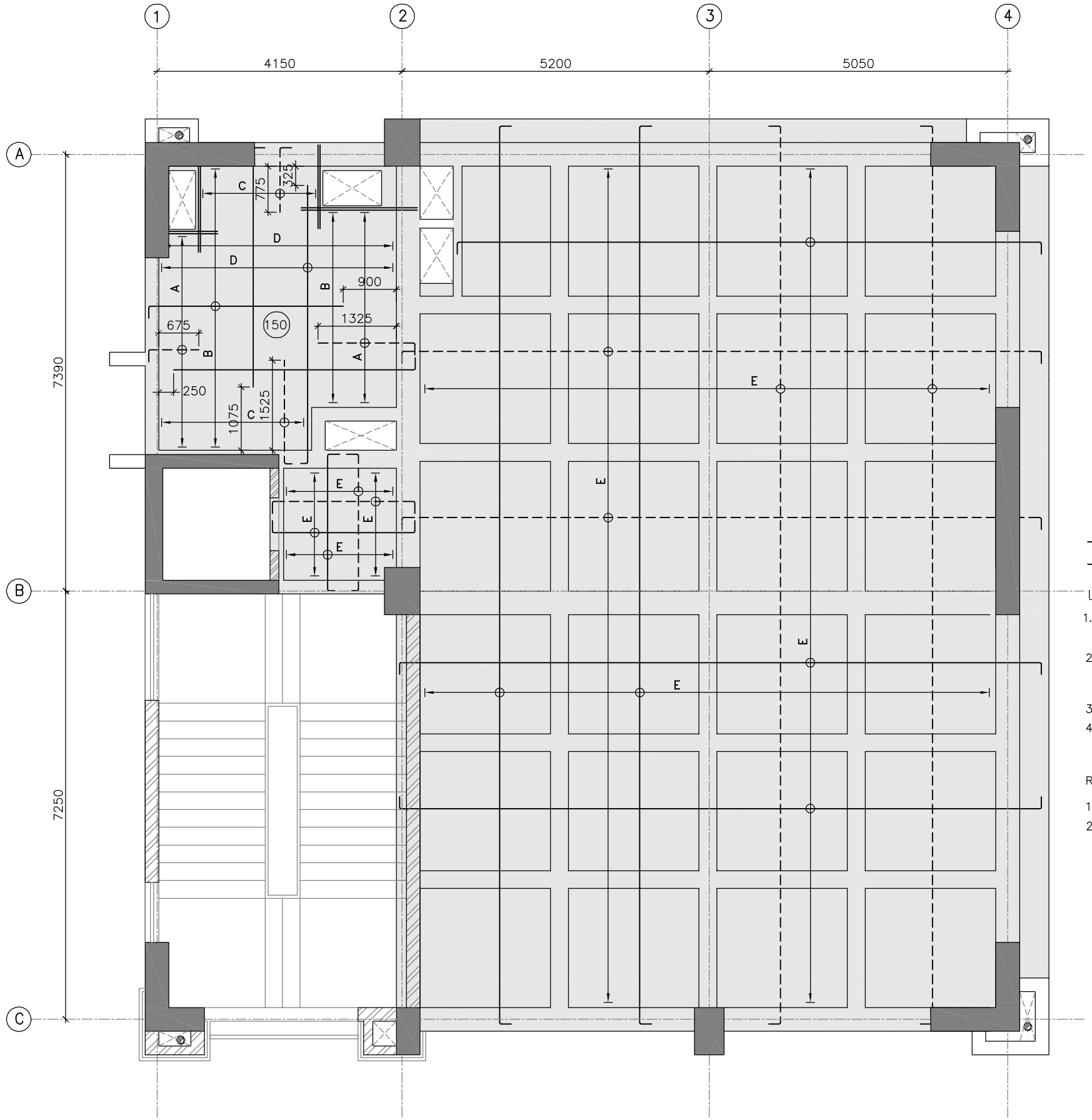

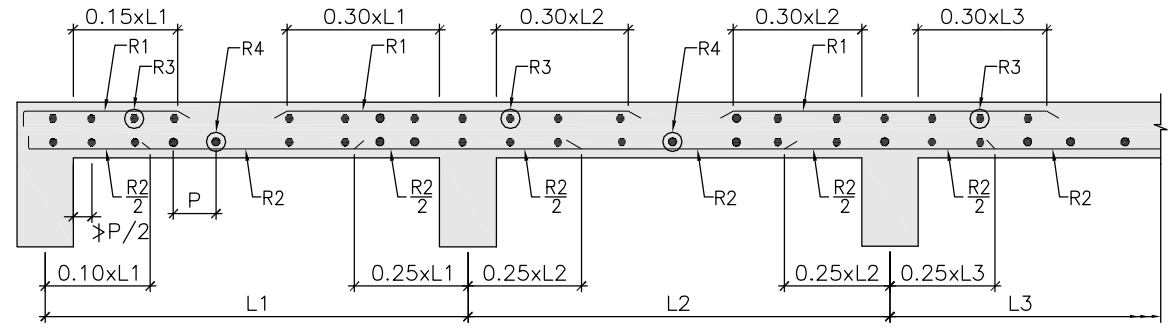

TYPICAL SECTION OF SLAB REINFORCEMENT

LEGEND:

A=10Φ@125C/C
B=10Φ@250C/C
C=10Φ@150C/C
D=10Φ@300C/C
E=8Φ@150C/C

TOP REINFORCEMENT
BOTTOM REINFORCEMENT

IMPOTANT NOTES:

1. SLAB REINFORCEMENT, WHEREVER NOT SHOWN SHALL BE OF 8ø@150C/C
2. ALL DISTRIBUTION REINFORCEMENT SHALL BE OF 8ø@150C/C WHEREVER REQUIRED (NOT SHOWN IN THE PLAN)
3. Ld = DEVELOPMENT LENGTH = 50ø
4. ALL SLAB THICKNESS SHALL BE OF 125mm U.N.O.

RELATED DRAWINGS:

1. TCE.10477A–CV–1007–RC–1001
2. TCE.10477A–CV–1007–RC–1022

NOTES:

1. ALL DIMENSIONS AND LEVELS ARE IN mm U.N.O.
2. ONLY FIGURED DIMENSIONS ARE TO BE FOLLOWED, NOT TO BE MEASURED.
3. GRADE OF CONCRETE SHALL BE OF M25(1:1:2) U.N.O.
4. GRADE OF REINFORCEMENT STEEL SHALL BE OF Fe500
5. THESE DRAWINGS ARE THE PROPERTY OF M/S TATA CONSULTING ENGINEERS LIMITED. THOSE SHALL NOT BE COPIED, TRANSFERRED, MODIFIED OR USED FOR ANY PURPOSE OTHER THAN FOR THE PLANNING AND CONSTRUCTION OF "INTEGRATED COMMAND CONTROL CENTRE PROJECT AT PANJABARI, GUWAHATI"
6. DE–SHUTTERING PERIOD SHALL NOT BE LESS THAN SPECIFIED BELOW: –

a) VERTICAL FACES OF COLUMN, BEAM & WALL			:	24 HOURS
b) SLAB	(i)	SPANNING UPTO 4.5m	:	7 DAYS
	(ii)	SPANNING OVER 4.5m	:	14 DAYS
c) BEAM	(i)	SPANNING UPTO 6.0m	:	14 DAYS
	(ii)	SPANNING OVER 6.0m	:	21 DAYS

8. CLEAR COVER TO THE MAIN REINFORCEMENT

a) FOUNDATION	:	60mm
b) COLUMN UPTO PLINTH	:	60mm
c) COLUMN ABOVE PLINTH	:	40mm
d) BEAM	:	25mm
e) WALL	:	30mm
f) SLAB	:	15–20mm

9. LAP & ANCHORAGE SHALL BE OF 50 TIMES OF BAR DIA.
10. NOT MORE THAN 50% OF THE BARS SHALL BE SPLICED AT ONE SECTION
11. USE SPACE BAR TO AVOID CONGESTION, WHEREVER NECESSARY.
12. ANY DISCREPANCY NOTED SHOULD BE BROUGHT TO THE NOTICE OF THE CONSULTANT.
13. THIS DRAWING SHALL BE READ IN CONJUNCTION WITH RELEVANT ARCHITECTURAL DRAWINGS.

TENDER PURPOSE ONLY

SIGN.													
INITIALS													
REVISIONS													
SIGN.													17.04.2020
INITIALS													
ISSUE	DRN	DSN	CHD	CV	EL	IC	ME	PL	HVAC	EXT	LS	PE/PM	APPD	DATE
				CLEARED									

GUWAHATI SMART CITY LIMITED
SMART CITY MISSION GUWAHATI

DETAILS OF ROOF SLAB

TATA CONSULTING ENGINEERS LIMITED
MUMBAI

SCALE : AS NOTED
DC & DISC: ---
DWG NO. TCE.10477A–CV–1007–RC–1029
ISSUE R0

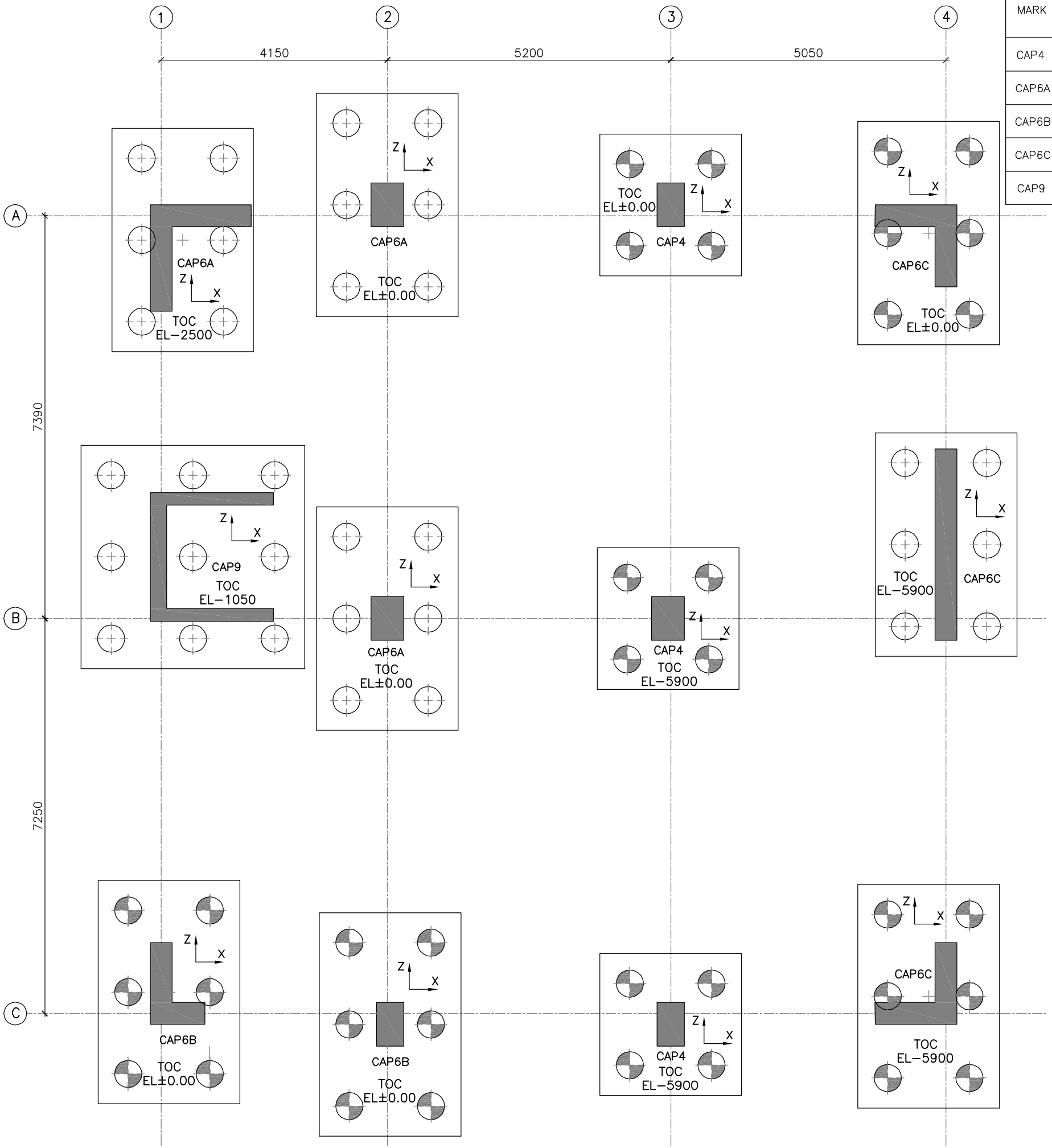

PILE CAP SCHEDULE

PILE CAP MARK	SIZE OF CAP			REINFOREMENT				REMARKS
				ALONG Z		ALONG X		
	L (mm)	B (mm)	D (mm)	(B1)	SHEAR REIN.(S1)	(B2)	SHEAR REIN.(S2)	
CAP4	2600	2600	1100	1 – LAYER 25Φ@175C/C	2L 16Φ@150C/C	1 – LAYER 25Φ@175C/C	2L 16Φ@150C/C	12Φ@150C/C FACE BAR
CAP6A	2600	4100	1300	2 – LAYER 25Φ@200C/C	4L 16Φ@150C/C	2 – LAYER 25Φ@200C/C	4L 16Φ@200C/C	12Φ@150C/C FACE BAR
CAP6B	2600	4100	1300	1 – LAYER 25Φ@140C/C	4L 16Φ@200C/C	1 – LAYER 25Φ@140C/C	2L 16Φ@200C/C	12Φ@150C/C FACE BAR
CAP6C	2600	4100	1300	2 – LAYER 25Φ@200C/C	4L 16Φ@200C/C	1 – LAYER 25Φ@150C/C	2L 16Φ@150C/C	12Φ@150C/C FACE BAR
CAP9	4100	4100	1300	1 – LAYER 25Φ@150C/C	6L 16Φ@200C/C	2 – LAYER 25Φ@150C/C	6L 16Φ@150C/C	12Φ@150C/C FACE BAR

PILE SCHEDULE

LEVEL	PARTICULARS	DESCRIPTION
TOP OF PILE CAP	PILE	CAST INSITU RCC PILE
	PILE SIZE	500ø
	LENGTH OF PILE	25.0m / 30.0m
	GRADE OF CONCRETE	M35
	LONGITUDINAL BAR	A= 9−16Φ
	TIES	8Φ@150C/C

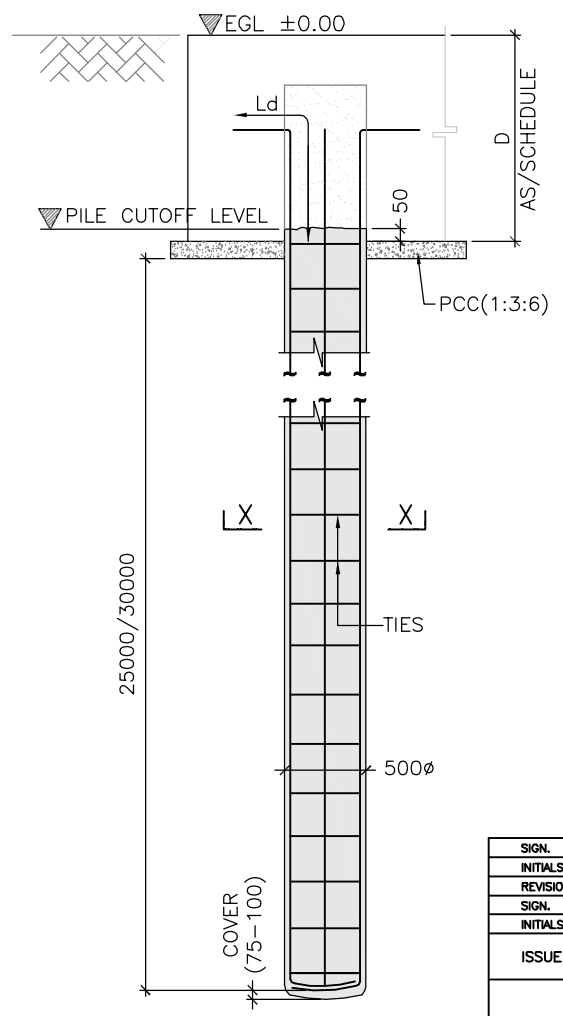

TYPICAL DETAIL OF CAST IN SITU PILE

RELATED DRAWINGS:

1. TCE.10477A−CV−1007−RC−1001
2. TCE.10477A−CV−1007−RC−1031
3. TCE.10477A−CV−1007−RC−1010

LEGEND:

500ø PILE, 30.0m LONG

500ø PILE, 25.0m LONG

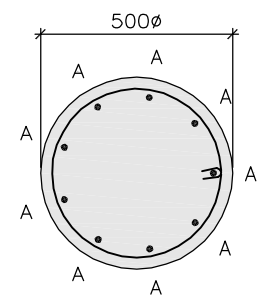

SECTION X−X

TOC STANDS FOR "TOP OF CAP" AND EL ARE IN mm U.N.O.

TENDER PURPOSE ONLY

SIGN.													
INITIALS													
REVISIONS													
SIGN.													09.05.2020
INITIALS													
ISSUE	DRN	DSN	CHD	CV	EL	IC	ME	PL	HVAC	EXT	LS	PE/PM	APPD	DATE
				CLEARED									

GUWAHATI SMART CITY LIMITED

SMART CITY MISSION GUWAHATI

DETAILS OF PILE AND PILE CAP (SHEET 1 / 2)

TATA CONSULTING ENGINEERS LIMITED

MUMBAI

SCALE : AS NOTED	DWG NO. TCE.10477A−CV−1007−RC−1030	ISSUE R0
DC & DISC: −−−		

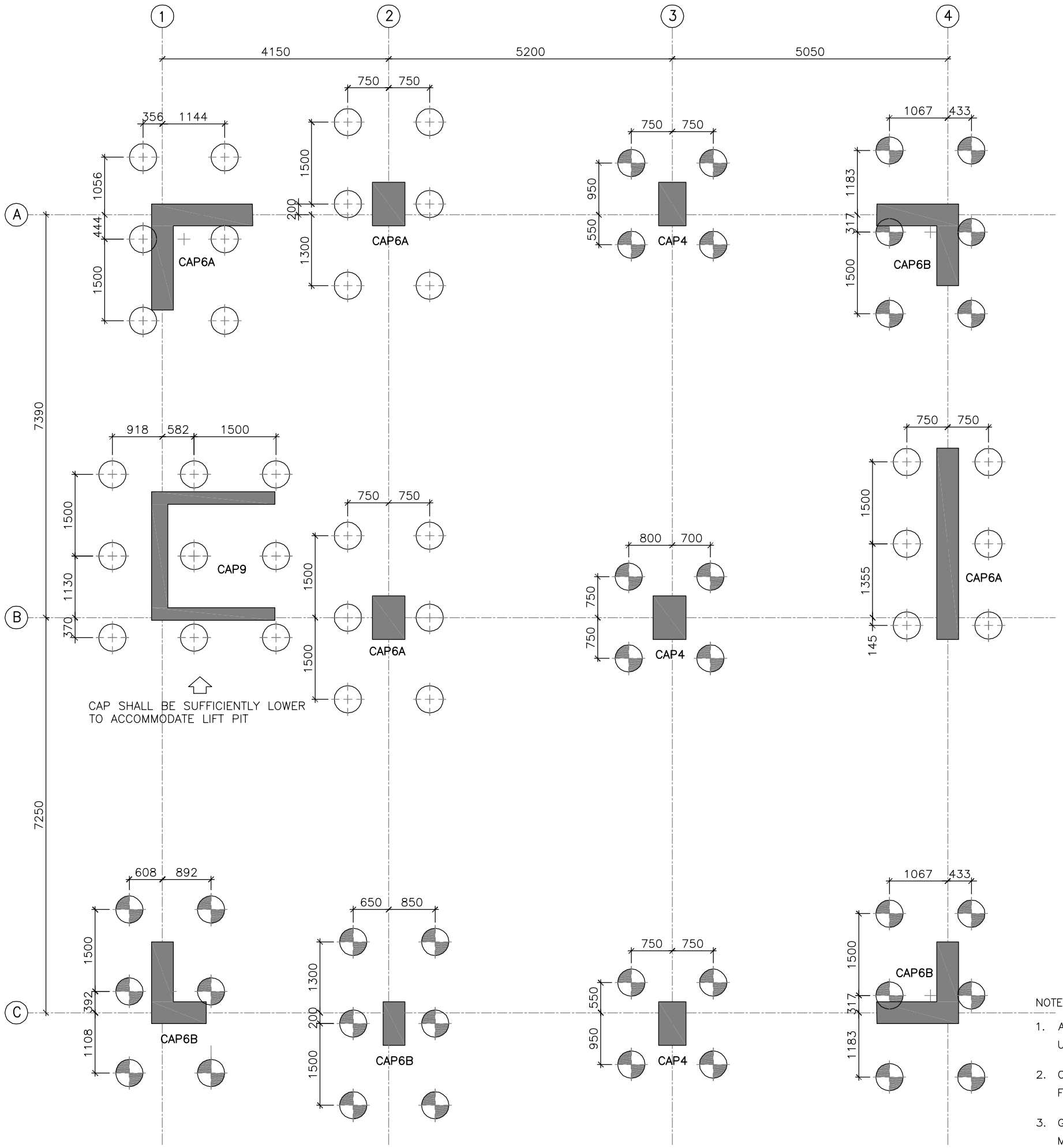

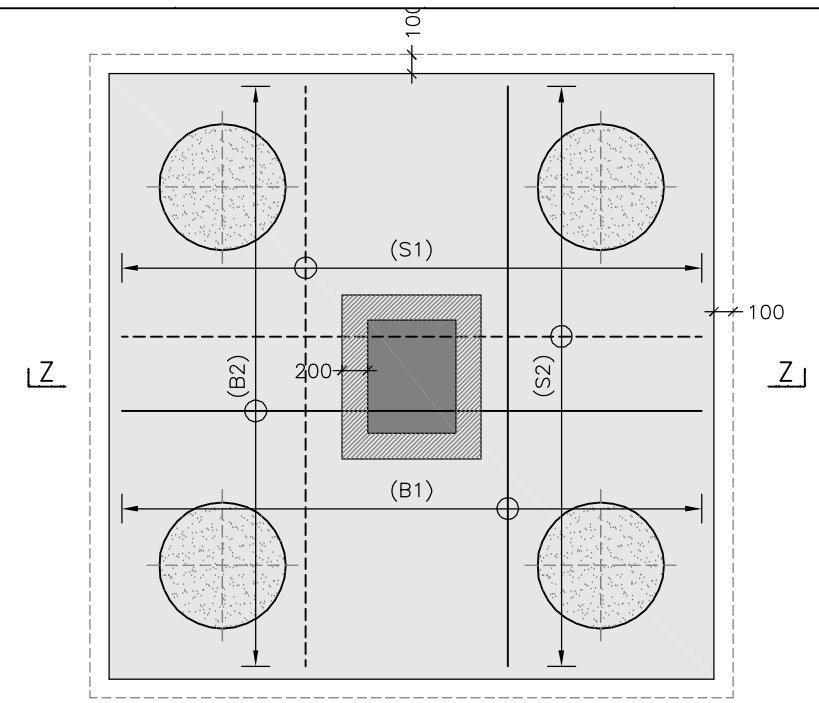

TYPICAL DETAIL OF PILE CAP – PLAN

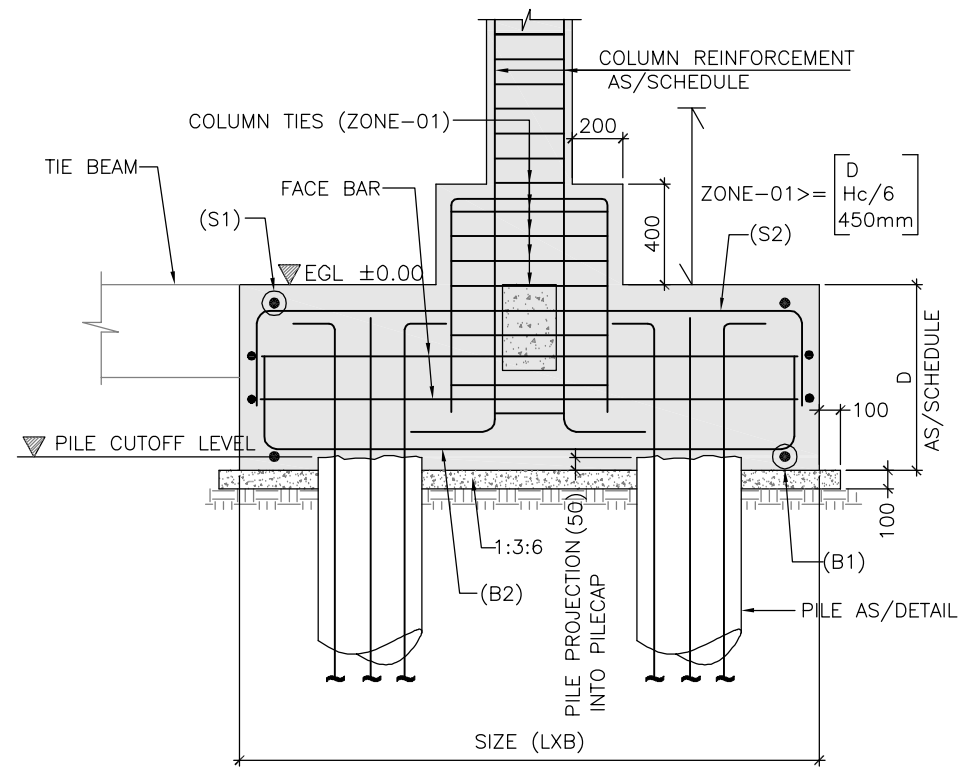

SECTION Z–Z

RELATED DRAWINGS:

1. TCE.10477A–CV–1007–RC–1001
2. TCE.10477A–CV–1007–RC–1030
3. TCE.10477A–CV–1007–RC–1010

NOTES:

1. ALL DIMENSIONS AND LEVELS ARE IN mm U.N.O.
2. ONLY FIGURED DIMENSIONS ARE TO BE FOLLOWED, NOT TO BE MEASURED.
3. GRADE OF CONCRETE OF PILE SHALL BE OF M35 AND CONCRETE OTHER THAN PILE SHALL BE OF M25
4. GRADE OF REINFORCEMENT STEEL SHALL BE OF Fe500

TENDER PURPOSE ONLY

SIGN.													
INITIALS													
REVISIONS													
SIGN.													19.04.2020
INITIALS													
ISSUE	DRN	DSN	CHD	CV	EL	IC	ME	PL	HVAC	EXT	LS	PE/PM	APPD	DATE
				CLEARED									

GUWAHATI SMART CITY LIMITED
SMART CITY MISSION GUWAHATI

DETAILS OF PILE & PILE CAP (SHEET 2 / 2)

TATA CONSULTING ENGINEERS LIMITED
MUMBAI

SCALE : AS NOTED
DC & DISC : ---
DWG NO. TCE.10477A–CV–1007–RC–1031
ISSUE R0

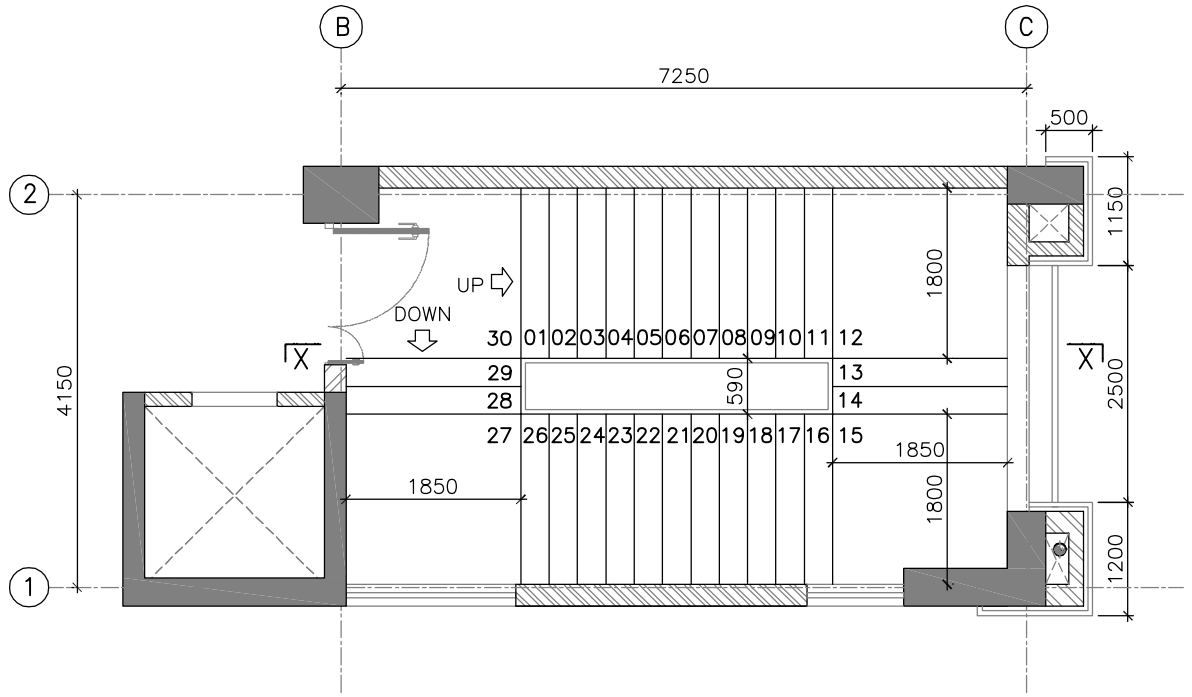

TYPICAL PLAN UPTO FOURTH FLOOR

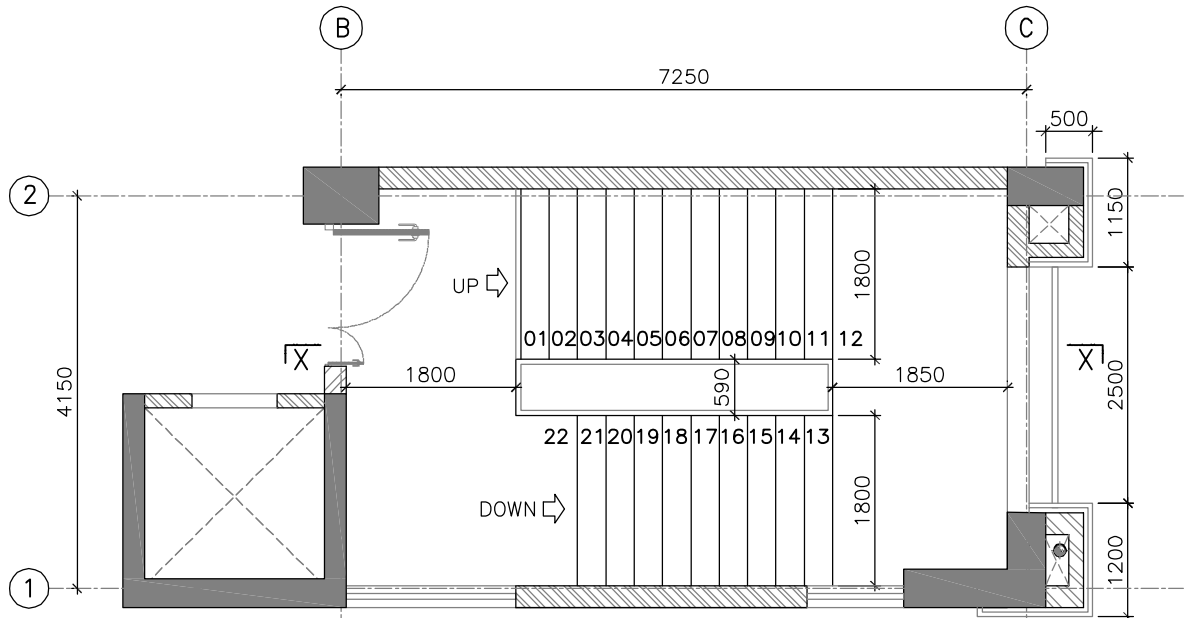

PLAN AT FOURTH FLOOR – LOWER

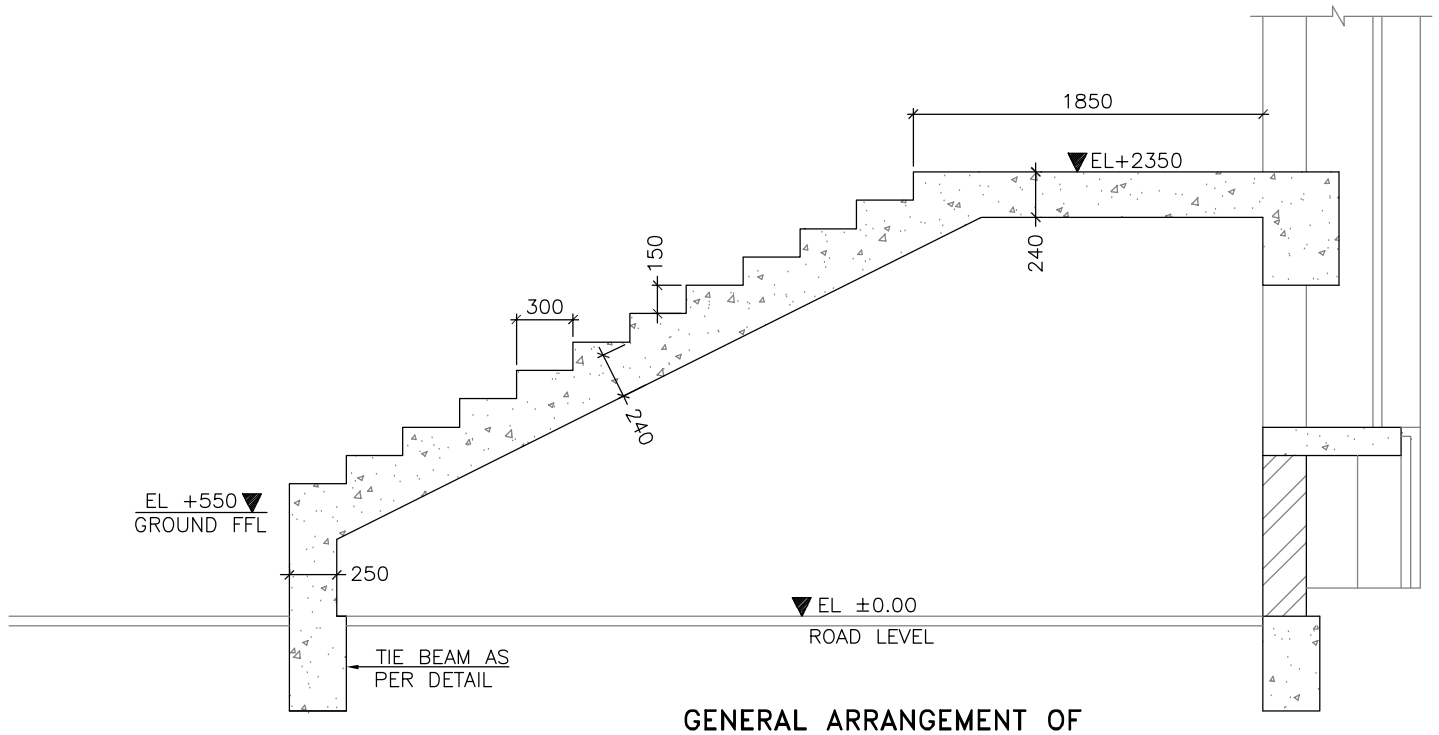

GENERAL ARRANGEMENT OF
SECTION THROUGH FIRST FLIGHT

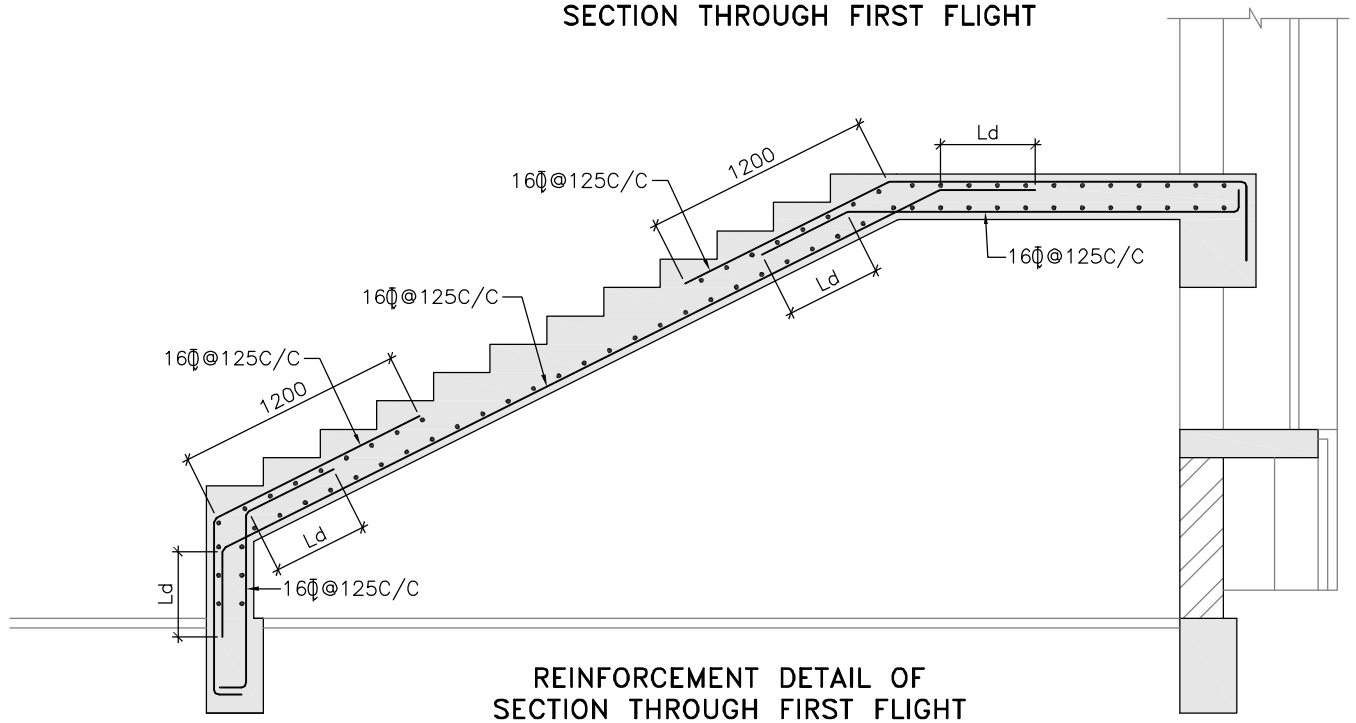

REINFORCEMENT DETAIL OF
SECTION THROUGH FIRST FLIGHT

RELATED DRAWINGS:

1. TCE.10477A–CV–1007–RC–1001
2. TCE.10477A–CV–1007–RC–1024
3. TCE.10477A–CV–1007–RC–1025
4. TCE.10477A–CV–1007–RC–1026
5. TCE.10477A–CV–1007–RC–1027
6. TCE.10477A–CV–1007–RC–1028
7. TCE.10477A–CV–1007–RC–1029

NOTES:

1. ALL DIMENSIONS AND LEVELS ARE IN mm U.N.O.
2. ONLY FIGURED DIMENSIONS ARE TO BE FOLLOWED, NOT TO BE MEASURED.
3. GRADE OF CONCRETE SHALL BE OF M25(1:1:2) U.N.O.
4. GRADE OF REINFORCEMENT STEEL SHALL BE OF Fe500
5. PERIODIC QUALITY CONTROL TESTS MAY BE UNDERTAKEN BY THE CONTRACTOR AND RESULTS OF THE SAME SHALL BE MADE AVAILABLE AS AND WHEN REQUIRED. THE QUALITY OF THE CONSTRUCTION SHALL BE ENSURED BY THE CONTRACTOR AND THEY ARE ALSO RESPONSIBLE TO CARRY OUT THE CONSTRUCTION AS PER LATEST CONSTRUCTION DRAWINGS ISSUED BY THE CONSULTANT TIME TO TIME.
6. THESE DRAWINGS ARE THE PROPERTY OF M/S TATA CONSULTING ENGINEERS LIMITED. THOSE SHALL NOT BE COPIED, TRANSFERRED, MODIFIED OR USED FOR ANY PURPOSE OTHER THAN FOR THE PLANNING AND CONSTRUCTION OF "INTEGRATED COMMAND CONTROL CENTRE PROJECT AT PANJABARI, GUWAHATI"
7. DE–SHUTTERING PERIOD SHALL NOT BE LESS THAN SPECIFIED BELOW:–
   a) VERTICAL FACES OF COLUMN, BEAM & WALL : 24 HOURS
   b) SLAB (i) SPANNING UPTO 4.5m : 7 DAYS
      (ii) SPANNING OVER 4.5m : 14 DAYS
   c) BEAM (i) SPANNING UPTO 6.0m : 14 DAYS
      (ii) SPANNING OVER 6.0m : 21 DAYS
8. CLEAR COVER TO THE MAIN REINFORCEMENT
   a) FOUNDATION : 60mm
   b) COLUMN UPTO PLINTH : 60mm
   c) COLUMN ABOVE PLINTH : 40mm
   d) BEAM : 25mm
   e) WALL : 30mm
   f) SLAB : 15–20mm
9. LAP & ANCHORAGE SHALL BE OF 50 TIMES OF BAR DIA.
10. NOT MORE THAN 50% OF THE BARS SHALL BE SPLICED AT ONE SECTION
11. ANY DISCREPANCY NOTED SHOULD BE BROUGHT TO THE NOTICE OF THE CONSULTANT.
12. THIS DRAWING SHALL BE READ IN CONJUNCTION WITH RELEVANT ARCHITECTURAL DRAWINGS.

ALL DISTRIBUTION REINFORCEMENT SHALL BE OF 8Φ@150C/C U.N.O.

TENDER PURPOSE ONLY

SIGN.														
INITIALS														
REVISIONS														
SIGN.														19.04.2020
INITIALS														
ISSUE	DRN	DSN	CHD	CV	EL	IC	ME	PL	HVAC	EXT	LS	PE/PM	APPD	DATE
				CLEARED										

GUWAHATI SMART CITY LIMITED
SMART CITY MISSION GUWAHATI

DETAILS OF STAIR CASE

TATA CONSULTING ENGINEERS LIMITED
MUMBAI

SCALE : AS NOTED	DWG NO. TCE.10477A–CV–1007–RC–1032	ISSUE R0
DC & DISC : –––		

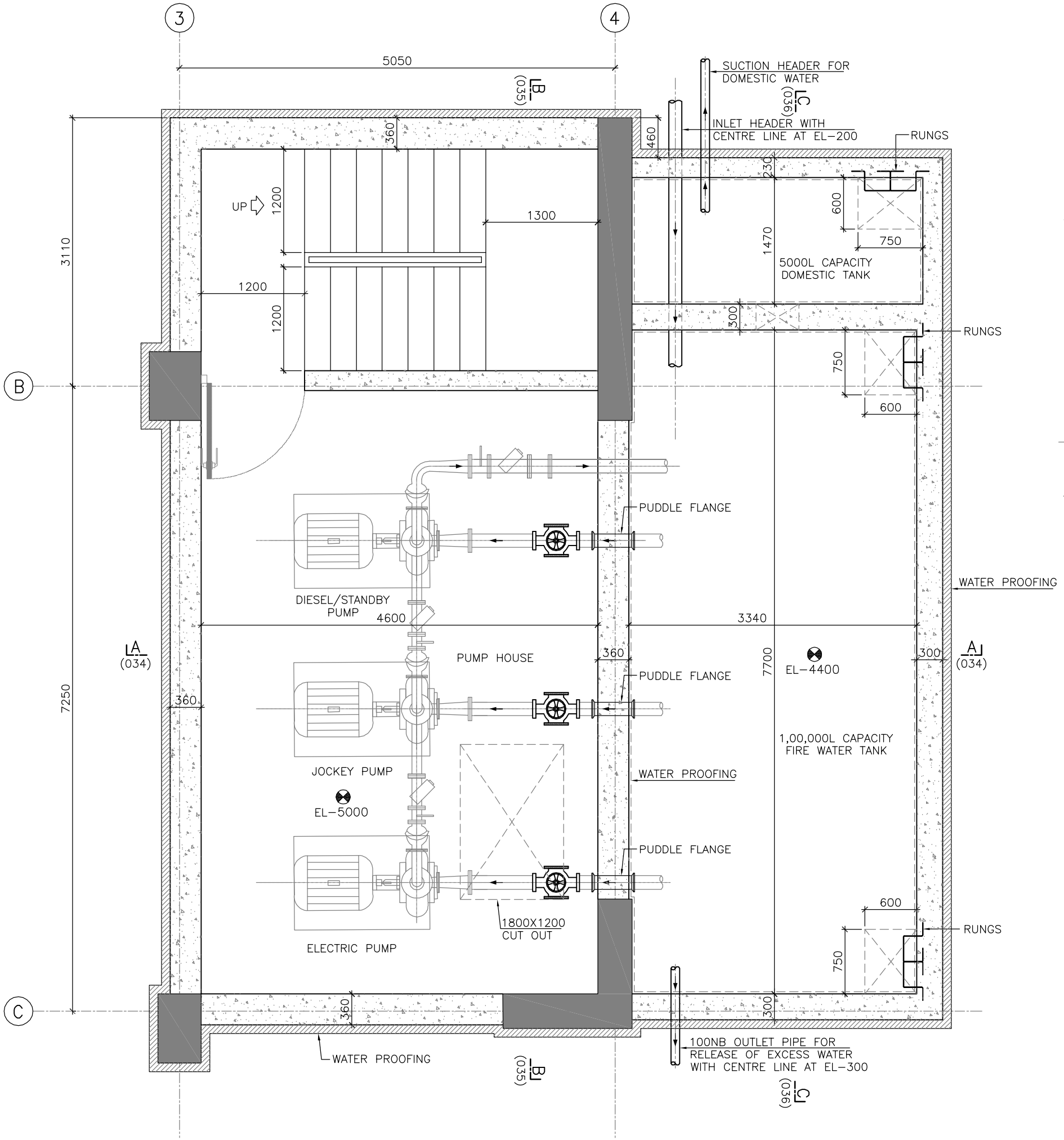

PLAN AT EL-5000

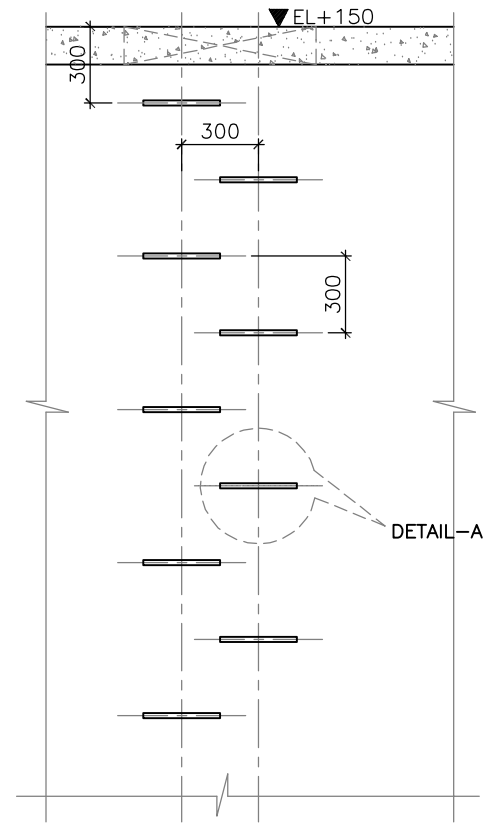

TYPICAL DETAIL OF RUNGS

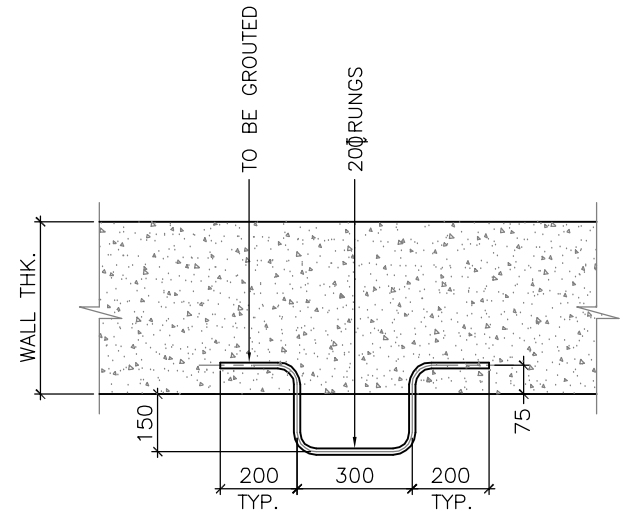

DETAIL A

NOTES:

1. ALL DIMENSIONS AND LEVELS ARE IN mm U.N.O.
2. ONLY FIGURED DIMENSIONS ARE TO BE FOLLOWED, NOT TO BE MEASURED.
3. GRADE OF CONCRETE SHALL BE OF M25(1:1:2) U.N.O.
4. GRADE OF REINFORCEMENT STEEL SHALL BE OF Fe500
5. PERIODIC QUALITY CONTROL TESTS MAY BE UNDERTAKEN BY THE CONTRACTOR AND RESULTS OF THE SAME SHALL BE MADE AVAILABLE AS AND WHEN REQUIRED. THE QUALITY OF THE CONSTRUCTION SHALL BE ENSURED BY THE CONTRACTOR AND THEY ARE ALSO RESPONSIBLE TO CARRY OUT THE CONSTRUCTION AS PER LATEST CONSTRUCTION DRAWINGS ISSUED BY THE CONSULTANT TIME TO TIME.
6. THESE DRAWINGS ARE THE PROPERTY OF M/S TATA CONSULTING ENGINEERS LIMITED. THOSE SHALL NOT BE COPIED, TRANSFERRED, MODIFIED OR USED FOR ANY PURPOSE OTHER THAN FOR THE PLANNING AND CONSTRUCTION OF "INTEGRATED COMMAND CONTROL CENTRE PROJECT AT PANJABARI, GUWAHATI"

TENDER PURPOSE ONLY

RELATED DRAWINGS:

1. TCE.10477A-CV-1007-RC-1001
2. TCE.10477A-CV-1007-RC-1010
3. TCE.10477A-CV-1007-RC-1030
4. TCE.10477A-CV-1007-RC-1031
5. TCE.10477A-CV-1007-RC-1034
6. TCE.10477A-CV-1007-RC-1035
7. TCE.10477A-CV-1007-RC-1036

SIGN.													
INITIALS													
REVISIONS													
SIGN.													05.05.2020
INITIALS													
ISSUE	DRN	DSN	CHD	CV	EL	IC	ME	PL	HVAC	EXT	LS	PE/PM	APPD	DATE
				CLEARED									

GUWAHATI SMART CITY LIMITED
SMART CITY MISSION GUWAHATI

DETAILS OF 1,55,000 LIT. CAPACITY UG WATER TANK
GENERAL ARRANGEMENT (SHEET 1 / 4)

TATA CONSULTING ENGINEERS LIMITED
MUMBAI

SCALE : AS NOTED DC & DISC: ---	DWG NO. TCE.10477A-CV-1007-RC-1033	ISSUE R0